North Carolina
Department of Environment & Natural Resources
Division of Air Quality

Standard Operating Procedure for

911A Summa Canister Sampler

1.0 General Information	
Name:	911 Canister Sampler
Manufacturer:	Xonteck Inc., 187 Tank Farm Road, Suite 140, San Luis Obispo, CA 93401
Users:	Monitoring site operators and Electronics Technician

Karen Clevenger, Environmental Technician Date

Pernell Judd, Electronics Technician Date

Jim Bowyer, LAB Supervisor Date

Donald D. Redmond, Jr., Ambient Monitoring Section Chief Date

Standard Operating Procedure
911A Summa Canister Sampler

2. Specifications:

- Provides a constant flow of sample gas into a Summa canister
- Has programmable timer for scheduling sample collection times.
- Runs on 12V DC power source.

3. General Operation:

a) Set-up and Leak Check.

1. No flow check is needed. The sampler flow is set when the instrument is cleaned and certified.
2. Attach the Summa canister to bulkhead Outlet fitting. *(Do not open the canister valve at this time.)*
3. With the power switch **on** and the valve switch in the **closed** position (oncc these switches are in these positions they should never be moved), turn on the pump by pushing the button on the timer (**hand symbol**). The pump will start immediately followed by a loud click from the valve opening.
4. Allow the pressure to increase to 10-15 psi. (Be careful not exceed the top range of the gauge as this may damage the gauge and cause the solenoid valve to stick.) Turn the pump off. Note the exact pressure and time.
5. Verify that the pressure does not drop by more than 1 psi over 15 minutes.
6. If the leak test fails, try to fix the leak by tightening fittings and retest.
7. If the leak test passes, **slowly** open the summa canister valve. Opening quickly may damage the gauge and cause the solenoid to stick.
8. The canister is ready for sampling.

b) Set Timer

1. Push the "Reset" button using a pointed object. Do not push too hard or the button will be damaged. '
2. Push and hold the "Clock" button, push the "Day" button as required to advance to the current day of the week.
3. Push and hold the "Clock" button, push the "h+" button as required to advance to the current hour. Time is set and displayed in Military Time format (0:00 to 23:59 hours). The hour should be set to the correct local time either Standard Time or Daylight Saving Time depending on the time of year.
4. Push and hold the "Clock" button, push the "m+" button as required to advance to the current minute.

c) Program sample timer:

1. Verify that the displayed time and day are correct, adjust per above if required.
2. Push the "Timer" button, *TIMER* 1 *ON* is displayed. Use the "h+" and "m+"

buttons to set the time when sampling will begin. Use the "Day" button to set the day of the week when sampling will begin. Four sampling day modes are available: any single day of the week; weekdays (Monday thru Friday); weekends (Saturday and Sunday); days Monday thu Saturday. Push the "Day" button repeatedly to view the different modes.

3. Push the "Timer" button, *TIMER* 1 *Off* is displayed. Use the "h+" and "m+" buttons to set the time when sampling will end. Use the "Day" button to set the day of the week when sampling will end.
4. Push the "Clock" button to save the program and return to the day and time display.
5. Repeat steps 2 thru 4 to set additional sampling times if required. Six on/off programs.
6. Programs can be viewed by pressing the "Timer" button repeatedly to advance through the six programs. Return to the day and time display by pressing the "Clock" button.
7. The "Timer button can also be used to select a program for editing. Unwanted programs can be removed by advancing the hour past 23 and minute past 59.
8. When in the programming mode the timer will revert to the day and time display after one minute of inactivity.

d) Removing the sample

1. **Close** the canister valve (two finger tight only).
2. Remove the canister from the 911 sampler.

Addenda:

Addendum to SOP for 911A Summa Canister Sampler for RMESI 911A Timer Set-up and programming

Addendum to SOP for 911A Summa Canister Sampler for using it with a COC form..

Addendum to

SOP for 911A Summa Canister Sampler

for RMESI 911A Timer Set-up and programming

Set time and day

1. Push the "Reset" button using a pointed object. Do not push too hard or the button will be damaged.
2. Push and hold the "Clock" button, push the "Day" button as required to advance to the current day of the week.
3. Push and hold the "Clock" button, push the "h+" button as required to advance to the current hour. Time is set and displayed in Military Time format (0 to 23:59 hours). The hour should be set to the correct local time either Standard Time or Daylight Saving Time depending on the time of year.
4. Push and hold the "Clock" button, push the "m+" button as required to advance to the current minute.

Program sampling time(s)

1. Verify that the displayed time and day are correct, adjust per above if required. 2. Push the "Timer" button, *TIMER* 1 *ON* is displayed. Use the "h+" and "m+" buttons to set the time when sampling will begin. Use the "Day" button to set the day of the week when sampling will begin. Four sampling day modes are available: any single day of the week; weekdays (Monday thru Friday); weekends (Saturday and Sunday); days Monday thru Saturday. Push the "Day" button repeatedly to view the different modes.
3. Push the "Timer" button, *TIMER* 1 *Off* is displayed. Use the "h+" and "m+" buttons to set the time when sampling will end. Use the "Day" button to set the day of the week when sampling will end.
4. Push the "Clock" button to save the program and return to the day and time display.
5. Repeat steps 2 thru 4 to set additional sampling times if required. Six on/off programs are available.

Programs can be viewed by pressing the "Timer" button repeatedly to advance through the six programs. Return to the day and time display by pressing the "Clock" button.

The "Timer button can also be used to select a program for editing. Unwanted programs can be removed by advancing the hour past 23 and minute past 59.

When in the programming mode the timer will revert to the day and time display after one minute of inactivity.

Operation

1. Set clock time and day.
2. Program sampling time(s).

The "Hand" button is used to manually start and stop sampling. Push for on and push again for off. Sampling status is displayed as "ON" or "OFF".

Inspect the battery terminals for corrosion periodically, replace as required. An alkaline "AAA" battery is used and should last for several years.

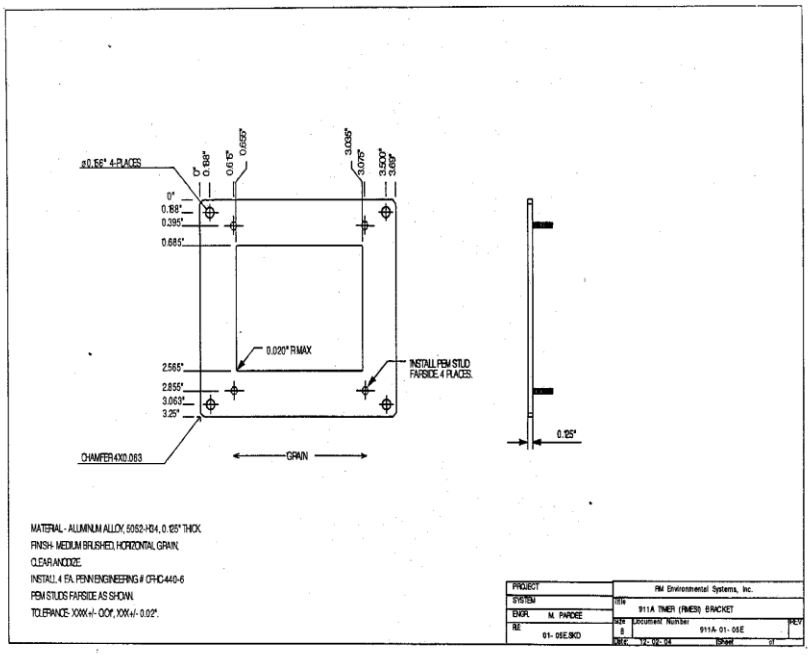

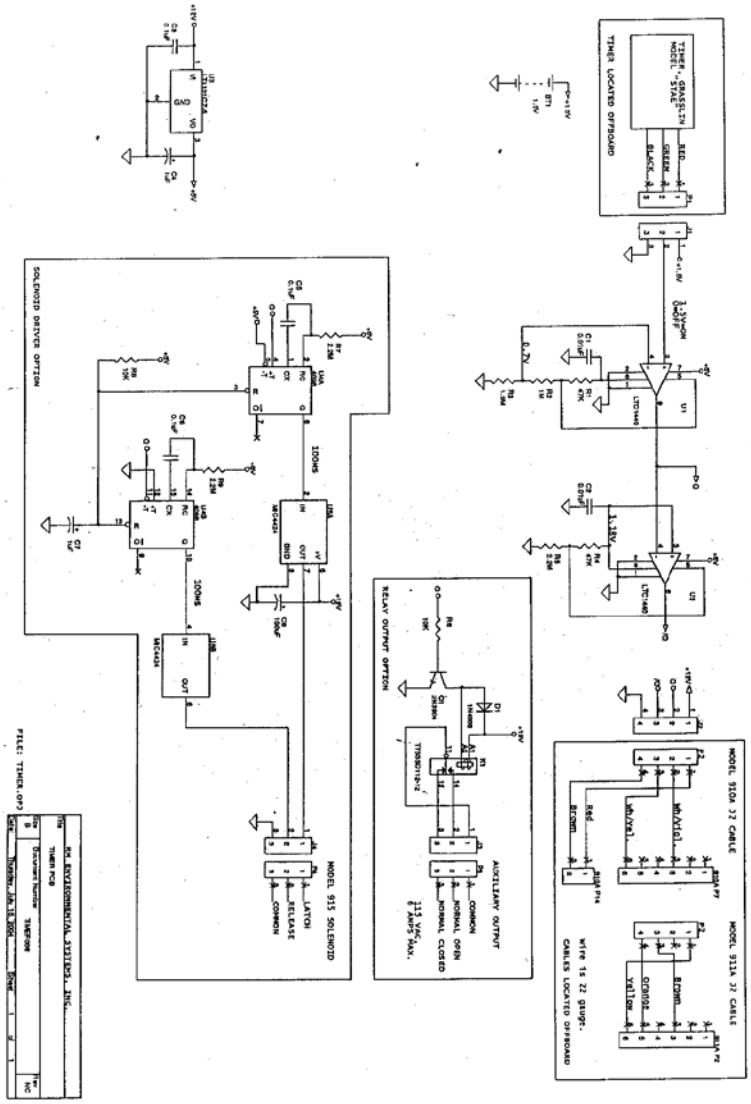
TIMER LOCATED OFFBOARD
MODEL 911A 37 CABLE
MODEL 911A 37 CABLE
WIRE 15 22 gauge.
CABLES LOCATED OFFBOARD
SOLENOID DRIVER OPTION
MODEL 915 SOLENOID
RELAY OUTPUT OPTION
AUXILIARY OUTPUT
COMMON
NORMAL OPEN
NORMAL CLOSED
LATCH
RELEASE
COMMON
100mS
300mS
FILE: TIMER.OPT

Addendum to

SOP for 911A Summa Canister Sampler

for using it with a COC form.

Section numbers refer to sections in "SOP for 911A Summa Canister Sampler" where directions below replace those sections when using a COC form.

3. General Operation:

a) Set-up and Leak Check.

9. Break the tamper-proof seal on the canister and record your initials, date and time in the Pre-Sample "COC Broken By/Date &Time (Field)" box on the COC form.
10. Attach the Summa canister to bulkhead Outlet fitting. *(Do not open the canister valve at this time.)*
11. With the power switch **on** and the valve switch in the **closed** position (oncc these switches are in these positions they should never be moved), turn on the pump by pushing the button on the timer (**hand symbol**). The pump will start immediately followed by a loud click from the valve opening.
12. Allow the pressure to increase to 10-15 psi. (Be careful not exceed the top range of the gauge as this may damage the gauge and cause the solenoid valve to stick.) Turn the pump off. Note the exact pressure and time.
13. Record the Sampling Information on the COC form and the canister tag.
14. Verify that the pressure does not drop by more than 1 psi over 15 minutes.
15. If the leak test fails, try to fix the leak by tightening fittings and retest.
16. If the leak test passes, check the leak check box on the COC form and **slowly** open the summa canister valve. Opening quickly may damage the gauge and cause the solenoid to stick.
17. Record the vacuum/pressure on the COC form in the "Field Verif." box. It should be close to the "Lab Reading": -29 to -28 inches Hg. If not, the can has leaked, use another can if available.
18. The canister is ready for sampling.

c) No changes

d) Removing the sample

3. Record the pressure on the COC form in the Canister pressure "Field Reading" box and on the cylinder tag. If the pressure reading is significantly lower or higher than usual, inform the LAB Electronics Technician who may advise checking and adjusting the flow.
4. Close the canister valve (two finger tight only).
5. Seal the valve with a tamper-proof seal and on the COC form record its number in the Post-Sample "COC No." box. Record your initials date and time in the "COC Sealed By/Date & Time (Field)" box.
6. Place COC form in top of canister and place in shipping box.