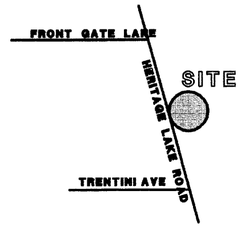

VICINITY MAP
NOT TO SCALE

WAKE COUNTY, NORTH CAROLINA

I, CHAD SARY, REVIEW OFFICER OF THE TOWN OF WAKE FOREST, CERTIFY THAT THE MAP OR PLAT TO WHICH THIS CERTIFICATION IS AFFIXED MEETS ALL STATUTORY REQUIREMENTS FOR RECORDING.

1/31/08 — DATE — REVIEW OFFICER

APPROVED FOR RECORDING BY THE TOWN OF WAKE FOREST.

01-31-08 — DATE — TOWN CLERK, NCMC

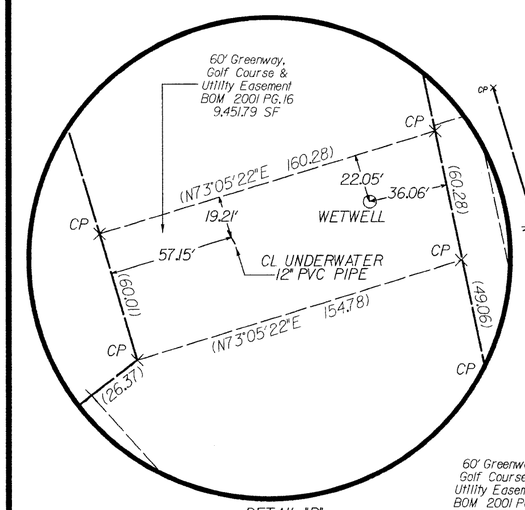

DETAIL "B"
NOT TO SCALE

N.C.G.S. "FORESTVILLE"
N=805,133.3995
E=2,142,561.7250
(NAD 83)

CONTROL CORNER
NC GRID COORDINATES
N=502,899.828
E=2,146,930.266

S 62°55'12"E 4,906.4296 (GRID)
S 62°55'12"E 4,906.7259 (GROUND)
COMBINED FACTOR = 0.9999384
(GRAPHIC TIE LINE ONLY)

CONTROL CORNER
NC GRID COORDINATES
N=802579.2007
E=2,146,737.0272

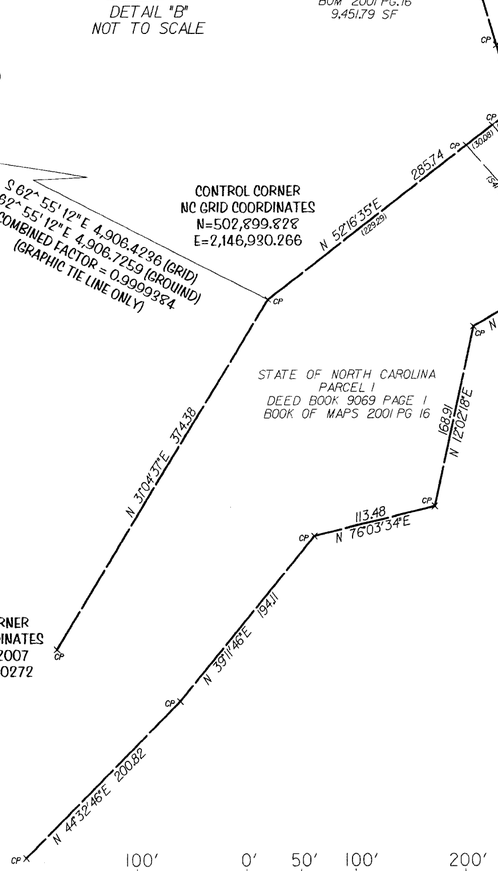

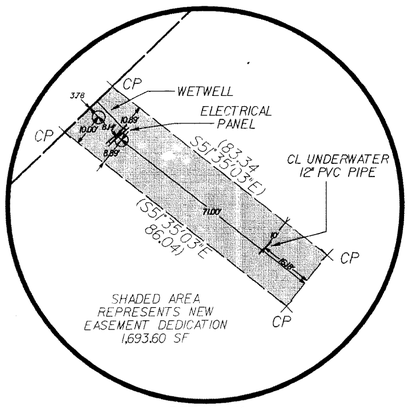

DETAIL "A"
NOT TO SCALE

100' 0' 50' 100' 200'
GRAPHIC SCALE
1 inch = 100 ft.

CERTIFICATE OF OWNERSHIP AND DEDICATION. I HEREBY CERTIFY THAT I AM THE OWNER OF THE PROPERTY SHOWN AND DESCRIBED HEREON WHICH IS LOCATED IN THE SUBDIVISION JURISDICTION OF WAKE FOREST, AND THAT I HEREBY ADOPT THIS PLAN OF SUBDIVISION WITH MY FREE CONSENT, ESTABLISH MINIMUM BUILDING SETBACKS, AND DEDICATE ALL STREETS, ALLEYS, WALKS, PARKS, AND OTHER SITES AND EASEMENTS TO PUBLIC OR PRIVATE USE AS NOTED. FURTHERMORE, I DEDICATE ALL SANITARY SEWER, STORM SEWER, AND WATERLINES TO THE TOWN OF WAKE FOREST OR OTHER PUBLIC AGENCY AS NOTED ON THIS PLAT.

STATE OF NORTH CAROLINA
STATE PROPERTY OFFICE
116 W JONES STREET
RALEIGH, NC 27603

CERTIFICATE OF OWNERSHIP AND DEDICATION. I HEREBY CERTIFY THAT I AM THE OWNER OF THE PROPERTY SHOWN AND DESCRIBED HEREON WHICH IS LOCATED IN THE SUBDIVISION JURISDICTION OF WAKE FOREST, AND THAT I HEREBY ADOPT THIS PLAN OF SUBDIVISION WITH MY FREE CONSENT, ESTABLISH MINIMUM BUILDING SETBACKS, AND DEDICATE ALL STREETS, ALLEYS, WALKS, PARKS, AND OTHER SITES AND EASEMENTS TO PUBLIC OR PRIVATE USE AS NOTED. FURTHERMORE, I DEDICATE ALL SANITARY SEWER, STORM SEWER, AND WATERLINES TO THE TOWN OF WAKE FOREST OR OTHER PUBLIC AGENCY AS NOTED ON THIS PLAT.

HERITAGE CLUB PROPERTIES, MGR
P.O. BOX 1615
WAKE FOREST N.C. 27588
(919)-562-1322
DATE 1-28-08

WAKE COUNTY, NC 278
LAURA M RIDDICK
REGISTER OF DEEDS
PRESENTED & RECORDED ON
02/01/2008 AT 12:51:00

BOOK:BM2008 PAGE:00225

RECORDED IN BOOK OF MAPS 2008, PAGE 225

I, Mark W. Yarbrough, certify that this plat was drawn under my supervision from an actual survey made under my supervision, deed description recorded in Book (see), Page (map); that the boundaries not surveyed are clearly indicated as drawn lines from information found in Book (see), Page (map); that the ratio of precision as calculated is 1:20,000+; that this plat was prepared in accordance with G.S. 47-30 as amended. Witness my original signature, registration number and seal this 29th day of January, A.D., 2008.

Mark W. Yarbrough, PLS
NC L-3396

SEAL L-3396 MARK W. YARBROUGH LAND SURVEYOR

I, Mark W. Yarbrough, Professional Land Surveyor No. L-3396, certify to one or more of the following as indicated thus (X):

(X) d. That the survey is of another category, such as the recombination of existing parcels, a court-ordered survey, or other exception to the definition of subdivision;

Mark W. Yarbrough, PLS
NC L-3396

NORTH CAROLINA PROFESSIONAL SEAL L-3396 LAND SURVEYOR MARK W. YARBROUGH

GENERAL NOTES :

ALL DISTANCES ARE HORIZONTAL GROUND DISTANCES UNLESS OTHERWISE NOTED.

AREA COMPUTED BY COORDINATE METHOD.

NO NORTH CAROLINA GRID MONUMENTS FOUND WITHIN 2000 FEET. GRID TIE SHOWN PER BOOK OF MAPS 2001 PAGE 16.

WETLAND FEATURES EXIST ON THIS SITE. FOR THEIR EXACT LOCATION SEE APPROVED WETLAND LOCATION MAP BY S&EC USACE AID # A10199920683, 200020343-346. ANY USE MUST FOLLOW CORP OF ENGINEERS GUIDELINES, SECTION 404 OF THE CLEAN WATER ACT.

NEUSE RIVER RIPARIAN BUFFERS EXIST ON THIS SITE. FOR THEIR EXACT LOCATION SEE APPROVED WETLAND LOCATION MAP BY S&EC USACE AID # A10199920683, 200020343-346.

A PORTION OF THE SUBJECT PROPERTY IS IN A SPECIAL FLOOD HAZARD AREA PER MAP NUMBER 3720184000J, EFFECTIVE DATE MAY 2ND, 2006. SAID MAP WAS DOWNLOADED ON 1-25-2008 FROM THE FOLLOWING WEBSITE. "WWW.NCFLOODMAPS.COM"

NO DEED RESTRICTIONS EXIST ON THIS SITE.

No.	Revision / Issue	Date

MULKEY ENGINEERS & CONSULTANTS
PO BOX 33127
RALEIGH, N.C. 27636
(919) 851-1912
(919) 851-1918 (FAX)
WWW.MULKEYINC.COM

EASEMENT RELOCATION & DEDICATION PLAT FOR HERITAGE CLUB PROPERTIES & THE STATE OF NORTH CAROLINA

WAKE FOREST TOWNSHIP
WAKE COUNTY
NORTH CAROLINA

PROJECT : 2001223.00	ZONED: R-20
PROJECT FILE: 1999456.00 WETWELL-MAP.dgn	P.I.N.: 1840-83-8992 1840-62-9697
DATE :	DRAWN BY : DFB CHECKED BY : MWY
SCALE : 1" = 100'	FB: FILE