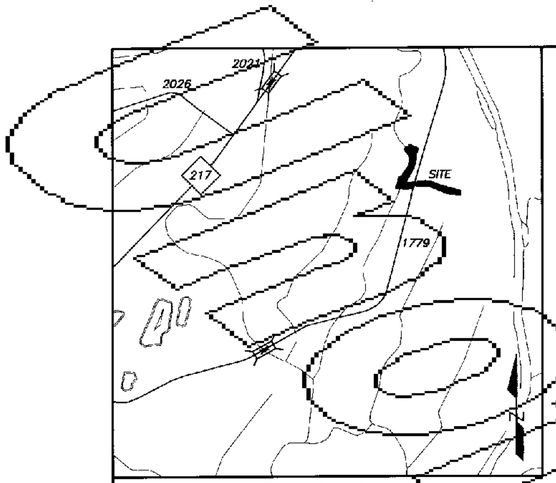

VICINITY MAP
(NOT TO SCALE)

SOURCE OF TITLE
DB 2282, PG 665

ACREAGE DATA
(BY COMPUTER)

AREA 1	= 8.357 AC±
AREA 2	= 3.335 AC±
AREA 3	= 1.154 AC±
AREA 4	= 3.997 AC±
AREA 5	= 12.865 AC±
AREA 6	= 0.244 AC±
AREA 7	= 1.383 AC±
AREA 8	= 3.481 AC±
AREA 9	= 0.579 AC±
TOTAL EASEMENT AREA	= 35.395 AC±

I, Kelli H. D'Arcy, REVIEW OFFICER OF HARNETT COUNTY, CERTIFY THAT THE MAP OR PLAT TO WHICH THIS CERTIFICATION IS AFFIXED MEETS ALL STATUTORY REQUIREMENTS FOR RECORDING.

Kelli H. D'Arcy
REVIEW OFFICER

2-27-07
DATE

FILED FOR REGISTRATION February 27, 2007
2007. 12:39 PM
PLAT CABINET _____, PAGE Map# 2007-192

Kimberly S. Hargrove
REGISTER OF DEEDS
HARNETT COUNTY
By: Trudi S. Wester,
Deputy

2007003608

FOR REGISTRATION REGISTER OF DEEDS
KIMBERLY S. HARGROVE
HARNETT COUNTY, NC
2007 FEB 27 12:39:00 PM
BK:2007 PG:192-195 FEE:$63.00

INSTRUMENT # 2007003608

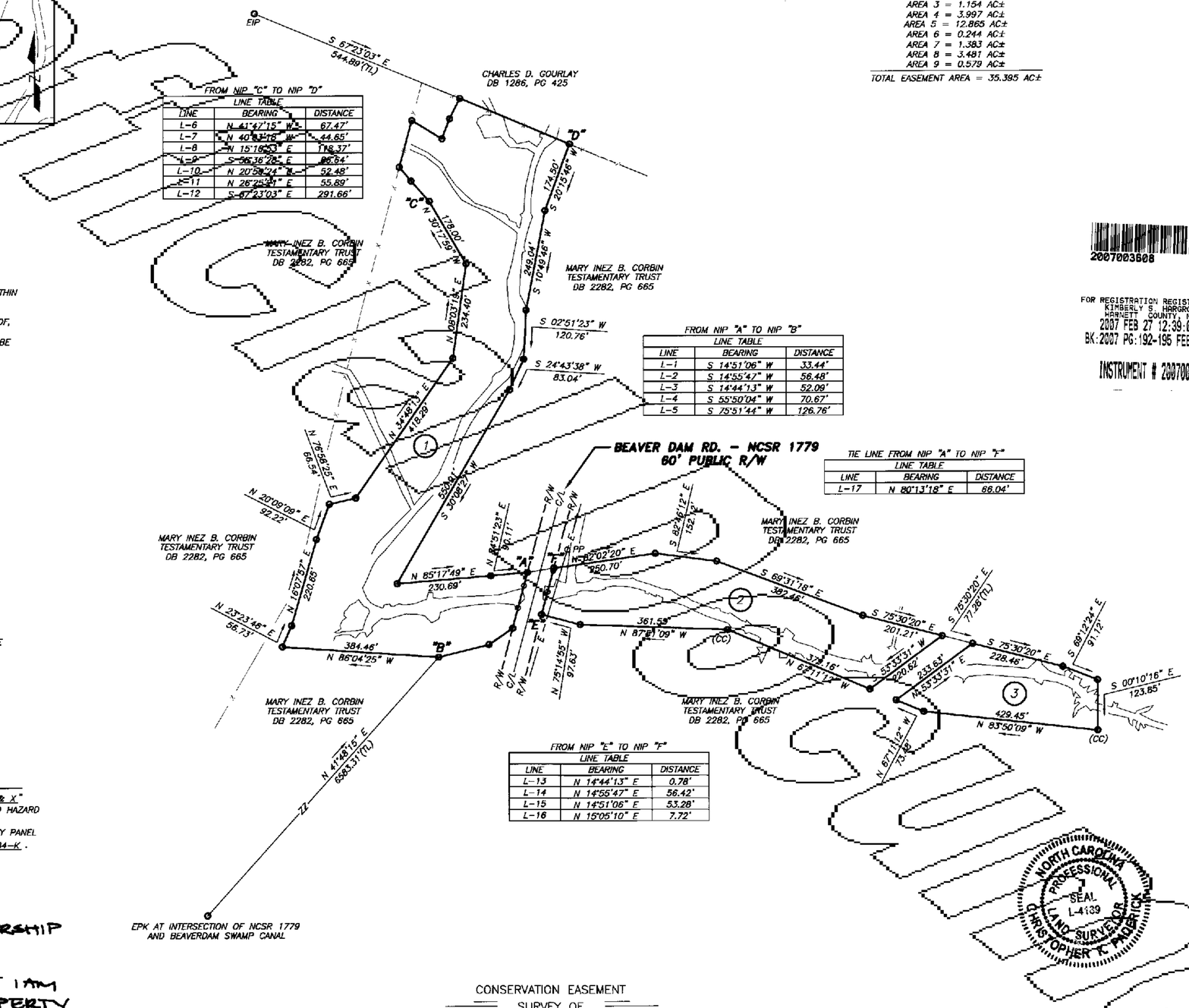

FROM NIP "C" TO NIP "D"

LINE TABLE		
LINE	BEARING	DISTANCE
L-6	N 41°47'15" W	67.47'
L-7	N 40°33'16" W	44.65'
L-8	N 15°16'53" E	118.37'
L-9	S 56°36'28" E	86.64'
L-10	N 20°58'24" E	52.48'
L-11	N 26°22'31" E	55.89'
L-12	S 67°23'03" E	291.66'

FROM NIP "A" TO NIP "B"

LINE TABLE		
LINE	BEARING	DISTANCE
L-1	S 14°51'06" W	33.44'
L-2	S 14°55'47" W	56.48'
L-3	S 14°44'13" W	52.09'
L-4	S 55°50'04" W	70.67'
L-5	S 75°51'44" W	126.76'

TIE LINE FROM NIP "A" TO NIP "F"

LINE TABLE		
LINE	BEARING	DISTANCE
L-17	N 80°13'18" E	66.04'

FROM NIP "E" TO NIP "F"

LINE TABLE		
LINE	BEARING	DISTANCE
L-13	N 14°44'13" E	0.78'
L-14	N 14°55'47" E	56.42'
L-15	N 14°51'06" E	53.28'
L-16	N 15°05'10" E	7.72'

NOTES:
1. NO NC GRID MONUMENTS WERE LOCATED WITHIN 2000' OF THIS PROPERTY.
2. ALL DISTANCES ARE HORIZONTAL GROUND MEASUREMENTS IN FEET & DECIMALS THEREOF, UNLESS OTHERWISE NOTED.
3. ALL UTILITIES AND IMPROVEMENTS MAY NOT BE SHOWN ON THIS SURVEY.

LEGEND
R/W = RIGHT OF WAY
C/L = CENTERLINE
EIP = EXISTING IRON PIPE
● = NEW IRON PIPE
○ = NO POINT SET
EPK = EXISTING PK NAIL
PP = POWER POLE
(TL) = TIE LINE
(CC) = CONTROL CORNER
—E— = ELECTRICAL LINE
—ZZ— = NOT TO SCALE
— — — = ADJOINING PROPERTY LINE
—x— = WIRE FENCE

FLOOD STATEMENT
THIS PROPERTY IS LOCATED IN ZONE "AE & X" AND IS PARTIALLY WITHIN A SPECIAL FLOOD HAZARD AREA, AS DETERMINED BY NFIP RATE MAPS DATED OCTOBER 3, 2006 : COMMUNITY PANEL NUMBERS 370328-0596-J & 370328-0584-K .

I, CHRISTOPHER K. PADERICK, PROFESSIONAL LAND SURVEYOR NO. 4189, CERTIFY THAT THIS SURVEY IS OF ANOTHER CATEGORY. TO WIT; AN EASEMENT SURVEY.

Christopher K. Paderick
L-4189

STATE OF NORTH CAROLINA HARNETT COUNTY

I, CHRISTOPHER K. PADERICK, CERTIFY THAT THIS PLAT WAS DRAWN UNDER MY SUPERVISION FROM AN ACTUAL SURVEY MADE UNDER MY SUPERVISION; (DEED DESCRIPTION RECORDED IN MAP & DEED BOOKS NOTED); THAT THE BOUNDARIES NOT SURVEYED ARE CLEARLY INDICATED AS DRAWN FROM INFORMATION REFERENCED HEREON; THAT THE RATIO OF PRECISION AS CALCULATED IS 1: 10,000+; THAT THIS PLAT WAS PREPARED IN ACCORDANCE WITH G.S. 47-30 AS AMENDED. WITNESS MY ORIGINAL SIGNATURE, REGISTRATION NUMBER AND SEAL THIS 11TH DAY OF FEBRUARY, A.D., 2007.

NORTH CAROLINA PROFESSIONAL SEAL L-4189 LAND SURVEYOR CHRISTOPHER K. PADERICK

Christopher K. Paderick
L-4189

CERTIFICATION OF OWNERSHIP & DEDICATION
I HEREBY CERTIFY THAT I AM THE OWNER OF THE PROPERTY SHOWN AND DESCRIBED HEREON

2/27/07
OWNER/AGENT DATE

This division of property is Exempt from the Harnett County Subdivision Regulations
Samantha Hicks 02/27/07
Subdivision Administrator Date

CONSERVATION EASEMENT
SURVEY OF
THE BEAVERDAM SITE (MAP 1)
FOR
EBX NEUSE I, LLC

STEWART'S CREEK TWSP. FEBRUARY 11, 2007
HARNETT COUNTY, NC 1" = 200'

200' 100' 0 200' 400'
GRAPHIC SCALE

PIN 0596-00-7943

MATRIX EAST, PLLC
PROFESSIONAL LAND SURVEYORS
906 N. QUEEN ST., SUITE A KINSTON, NC 28501
TEL: 252-522-2500 FAX: 252-522-4747

DRAWN BY: CKP	PROJECT NO.: 20060125
SURVEYED BY: RJC/LDL	DATE: 2/11/2007
SCALE: 1" = 200'	DRAWING NAME: NORTH

MAP 1 OF 3

Map # 2007-192

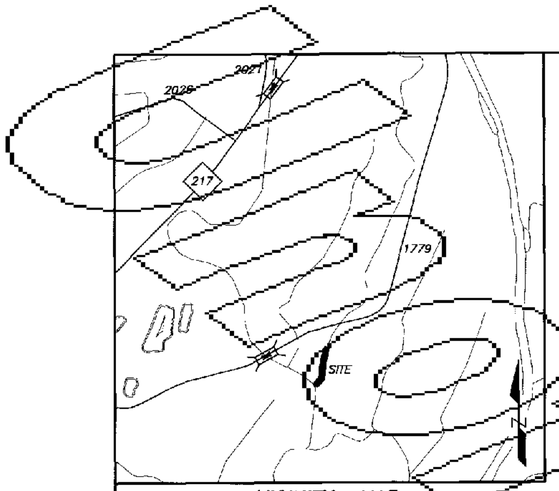

VICINITY MAP
(NOT TO SCALE)

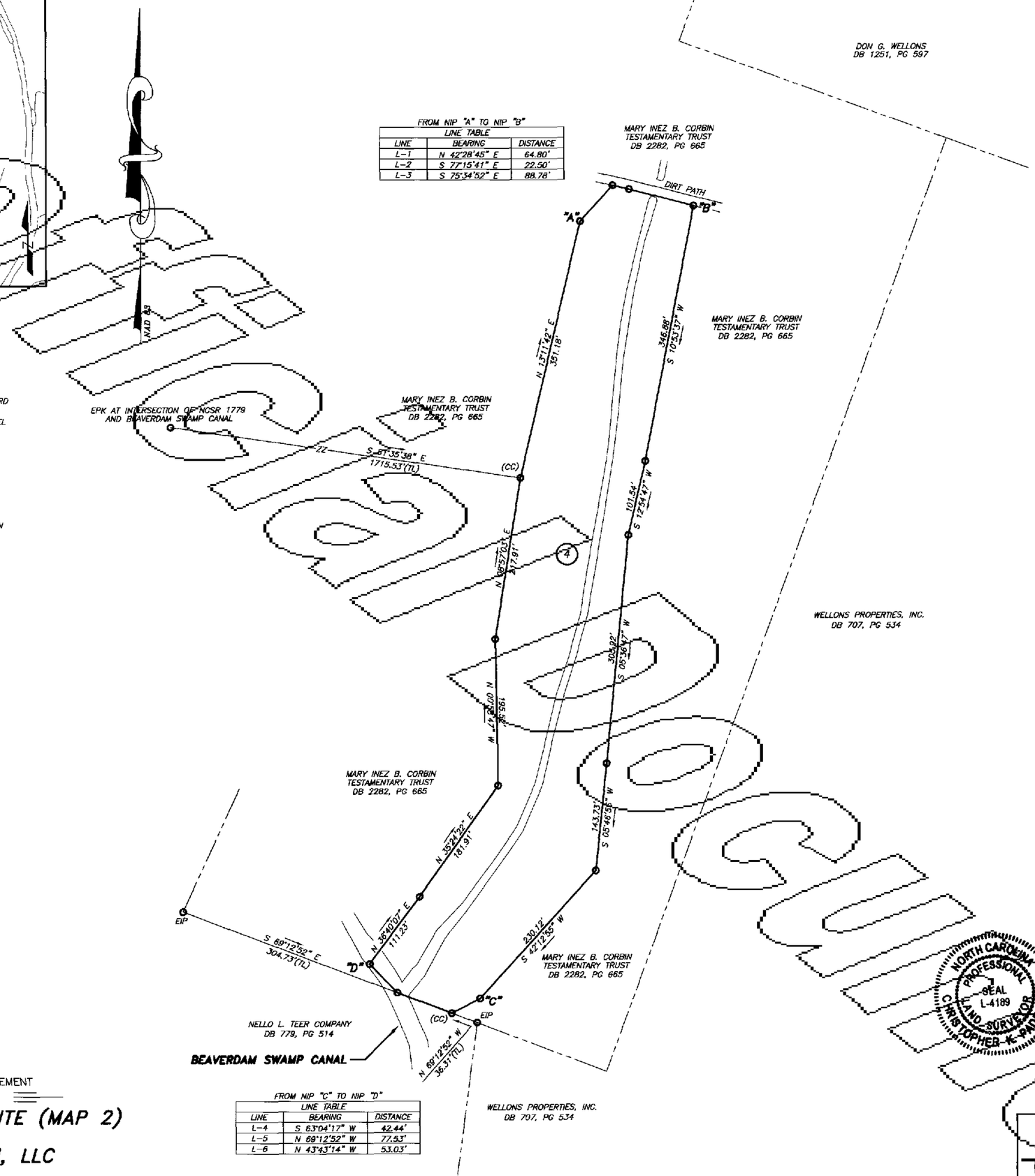

FROM NIP "A" TO NIP "B"

LINE TABLE		
LINE	BEARING	DISTANCE
L-1	N 42°28'45" E	64.80'
L-2	S 77°15'41" E	22.50'
L-3	S 75°34'52" E	88.78'

FROM NIP "C" TO NIP "D"

LINE TABLE		
LINE	BEARING	DISTANCE
L-4	S 63°04'17" W	42.44'
L-5	N 69°12'52" W	77.53'
L-6	N 43°43'14" W	53.03'

FLOOD STATEMENT

THIS PROPERTY IS LOCATED IN ZONE "AE & X" AND IS PARTIALLY WITHIN A SPECIAL FLOOD HAZARD AREA, AS DETERMINED BY NFIP RATE MAPS DATED OCTOBER 3, 2006 : COMMUNITY PANEL NUMBER 370328-0584-K .

NOTES:

1. NO NC GRID MONUMENTS WERE LOCATED WITHIN 2000' OF THIS PROPERTY.
2. ALL DISTANCES ARE HORIZONTAL GROUND MEASUREMENTS IN FEET & DECIMALS THEREOF, UNLESS OTHERWISE NOTED.
3. ALL UTILITIES AND IMPROVEMENTS MAY NOT BE SHOWN ON THIS SURVEY.

SOURCE OF TITLE

DB 2282, PG 665

ACREAGE DATA
(BY COMPUTER)

AREA 1 = 8.357 AC±
AREA 2 = 3.335 AC±
AREA 3 = 1.154 AC±
AREA 4 = 3.997 AC±
AREA 5 = 12.865 AC±
AREA 6 = 0.244 AC±
AREA 7 = 1.383 AC±
AREA 8 = 3.481 AC±
AREA 9 = 0.579 AC±

TOTAL EASEMENT AREA = 35.395 AC±

LEGEND

EIP = EXISTING IRON PIPE
O = NEW IRON PIPE
EPK = EXISTING PK NAIL
(TL) = TIE LINE
(CC) = CONTROL CORNER
—— — —— = ADJOINING PROPERTY LINE
—— x —— = WIRE FENCE
——ZZ—— = NOT TO SCALE

I, Kelli H. D'Arcy, REVIEW OFFICER OF HARNETT COUNTY, CERTIFY THAT THE MAP OR PLAT TO WHICH THIS CERTIFICATION IS AFFIXED MEETS ALL STATUTORY REQUIREMENTS FOR RECORDING.

Kelli H. D'Arcy
REVIEW OFFICER

2-27-07
DATE

FILED FOR REGISTRATION February 27, 2007.
2007. 12:34 PM
~~PLAT CABINET~~ _____, ~~PAGE~~ Map# 2007-193

Kimberly S. Hargrove
REGISTER OF DEEDS
HARNETT COUNTY

By: Trudi S. Webster, Deputy

I, CHRISTOPHER K. PADERICK, PROFESSIONAL LAND SURVEYOR NO. 4189, CERTIFY THAT THIS SURVEY IS OF ANOTHER CATEGORY. TO WIT: AN EASEMENT SURVEY.

Christopher K. Paderick
L-4189

STATE OF NORTH CAROLINA HARNETT COUNTY

I, CHRISTOPHER K. PADERICK, CERTIFY THAT THIS PLAT WAS DRAWN UNDER MY SUPERVISION FROM AN ACTUAL SURVEY MADE UNDER MY SUPERVISION; (DEED DESCRIPTION RECORDED IN MAP & DEED BOOKS NOTED); THAT THE BOUNDARIES NOT SURVEYED ARE CLEARLY INDICATED AS DRAWN FROM INFORMATION REFERENCED HEREON; THAT THE RATIO OF PRECISION AS CALCULATED IS 1: 10,000+; THAT THIS PLAT WAS PREPARED IN ACCORDANCE WITH G.S. 47-30 AS AMENDED. WITNESS MY ORIGINAL SIGNATURE, REGISTRATION NUMBER AND SEAL THIS 11TH DAY OF FEBRUARY, A.D., 2007.

NORTH CAROLINA PROFESSIONAL SEAL L-4189 LAND SURVEYOR CHRISTOPHER K. PADERICK

Christopher K. Paderick
L-4189

CONSERVATION EASEMENT
SURVEY OF

THE BEAVERDAM SITE (MAP 2)
FOR
EBX NEUSE I, LLC

STEWART'S CREEK TWSP. FEBRUARY 11, 2007
HARNETT COUNTY, NC 1" = 100'

100' 50' 0 100' 200'
GRAPHIC SCALE

PIN 0585-85-1846

MAP 2 OF 3

MATRIX EAST, PLLC
PROFESSIONAL LAND SURVEYORS
906 N. QUEEN ST., SUITE A KINSTON, NC 28501
TEL: 252-522-2900 FAX: 252-522-4747

DRAWN BY: CKP	PROJECT NO.: 20060125
SURVEYED BY: RJC/LDL	DATE: 2/11/2007
SCALE: 1" = 100'	DRAWING NAME: MIDDLE

Map# 2007-193

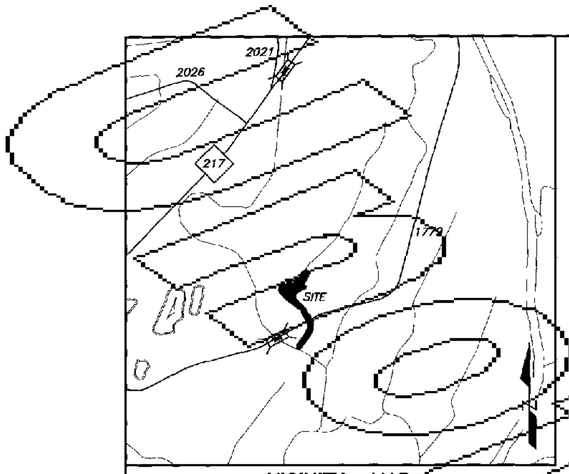

VICINITY MAP
(NOT TO SCALE)

FLOOD STATEMENT

THIS PROPERTY IS LOCATED IN ZONE "AE & X" AND IS PARTIALLY WITHIN A SPECIAL FLOOD HAZARD AREA, AS DETERMINED BY NFIP RATE MAPS DATED OCTOBER 3, 2006 : COMMUNITY PANEL NUMBER 370328-0584-K .

NOTES:

1. NO NC GRID MONUMENTS WERE LOCATED WITHIN 2000' OF THIS PROPERTY.
2. ALL DISTANCES ARE HORIZONTAL GROUND MEASUREMENTS IN FEET & DECIMALS THEREOF, UNLESS OTHERWISE NOTED.
3. ALL UTILITIES AND IMPROVEMENTS MAY NOT BE SHOWN ON THIS SURVEY.

SOURCE OF TITLE

DB 2282, PG 665
DB 1018, PG 39
DB 641, PG 634

ACREAGE DATA
(BY COMPUTER)

AREA 1 = 8.357 AC±
AREA 2 = 3.335 AC±
AREA 3 = 1.154 AC±
AREA 4 = 3.997 AC±
AREA 5 = 12.865 AC±
AREA 6 = 0.244 AC±
AREA 7 = 1.383 AC±
AREA 8 = 3.481 AC±
AREA 9 = 0.579 AC±
TOTAL EASEMENT AREA = 35.395 AC±

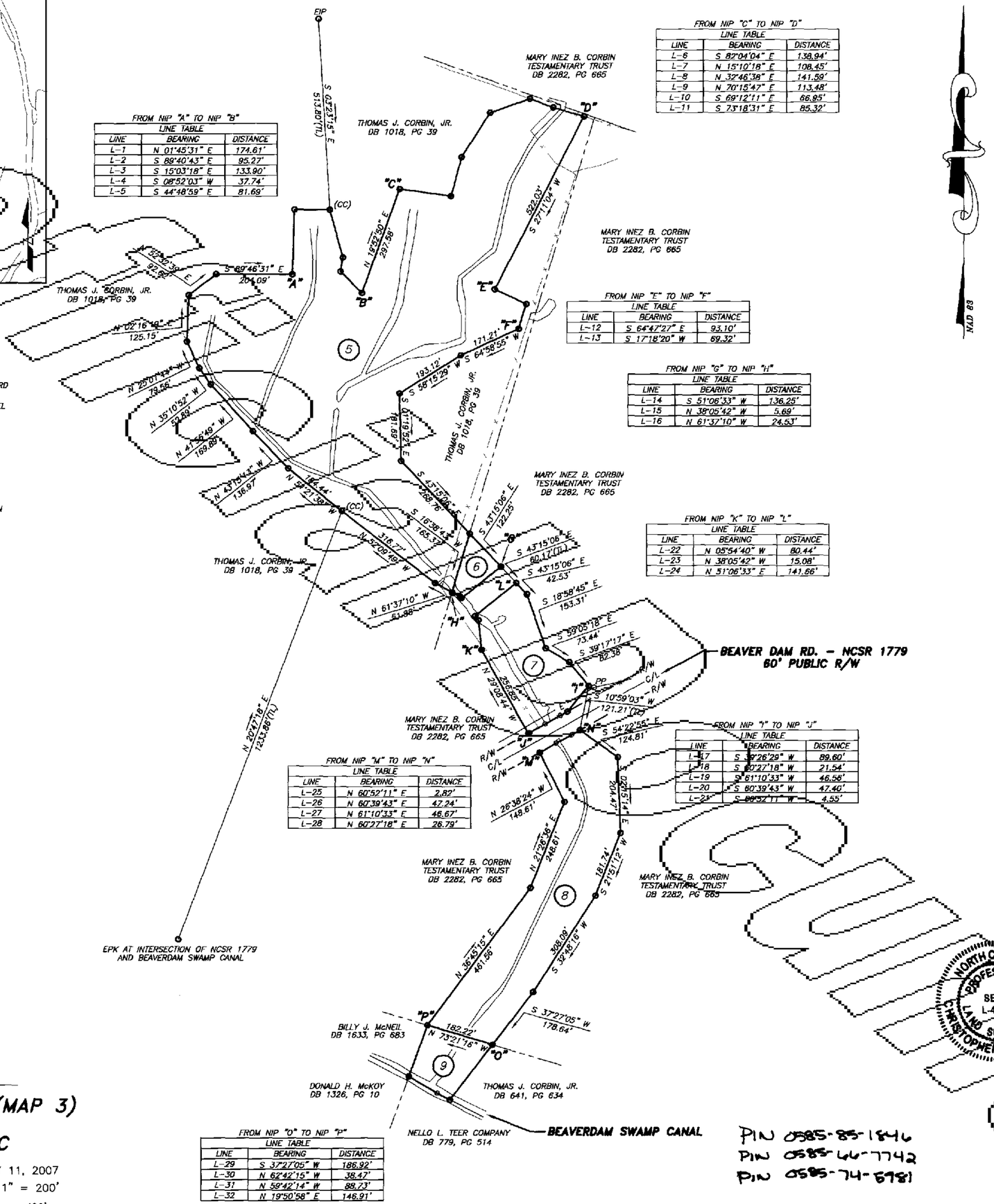

FROM NIP "A" TO NIP "B"

LINE TABLE		
LINE	BEARING	DISTANCE
L-1	N 01°45'31" E	174.61'
L-2	S 89°40'43" E	95.27'
L-3	S 15°03'18" E	133.90'
L-4	S 08°52'03" W	37.74'
L-5	S 44°48'59" E	81.69'

FROM NIP "C" TO NIP "D"

LINE TABLE		
LINE	BEARING	DISTANCE
L-6	S 82°04'04" E	138.94'
L-7	N 15°10'18" E	108.45'
L-8	N 32°46'38" E	141.59'
L-9	N 70°15'47" E	113.48'
L-10	S 69°12'11" E	66.85'
L-11	S 73°18'31" E	85.32'

FROM NIP "E" TO NIP "F"

LINE TABLE		
LINE	BEARING	DISTANCE
L-12	S 64°47'27" E	93.10'
L-13	S 17°18'20" W	69.32'

FROM NIP "G" TO NIP "H"

LINE TABLE		
LINE	BEARING	DISTANCE
L-14	S 51°06'33" W	136.25'
L-15	N 38°05'42" W	5.69'
L-16	N 61°37'10" W	24.53'

FROM NIP "K" TO NIP "L"

LINE TABLE		
LINE	BEARING	DISTANCE
L-22	N 05°54'40" W	80.44'
L-23	N 38°05'42" W	15.08'
L-24	N 51°06'33" E	141.66'

FROM NIP "I" TO NIP "J"

LINE TABLE		
LINE	BEARING	DISTANCE
L-17	S 39°26'29" W	89.60'
L-18	S 60°27'18" W	21.54'
L-19	S 61°10'33" W	46.56'
L-20	S 60°39'43" W	47.40'
L-21	S 88°52'11" W	4.55'

FROM NIP "M" TO NIP "N"

LINE TABLE		
LINE	BEARING	DISTANCE
L-25	N 60°52'11" E	2.82'
L-26	N 60°39'43" E	47.24'
L-27	N 61°10'33" E	46.67'
L-28	N 60°27'18" E	26.79'

FROM NIP "O" TO NIP "P"

LINE TABLE		
LINE	BEARING	DISTANCE
L-29	S 37°27'05" W	186.92'
L-30	N 62°42'15" W	38.47'
L-31	N 59°42'14" W	88.73'
L-32	N 19°50'58" E	146.91'

NAD 83

I, Kelli H. D'Arcy, REVIEW OFFICER OF HARNETT COUNTY, CERTIFY THAT THE MAP OR PLAT TO WHICH THIS CERTIFICATION IS AFFIXED MEETS ALL STATUTORY REQUIREMENTS FOR RECORDING.

Kelli H. D'Arcy
REVIEW OFFICER

2-27-07
DATE

FILED FOR REGISTRATION February 27, 2007
2007. 12:31 PM
PLAT CABINET _____, PAGE Map # 2007-194

Kimberly S. Hargrave
REGISTER OF DEEDS
HARNETT COUNTY
By: Judi S. Wester, Deputy

LEGEND

R/W = RIGHT OF WAY
C/L = CENTERLINE
EIP = EXISTING IRON PIPE
● = NEW IRON PIPE
○ = NO POINT SET
EPK = EXISTING PK NAIL
PP = POWER POLE
(TL) = TIE LINE
(CC) = CONTROL CORNER
—E— = ELECTRICAL LINE
— — — = ADJOINING PROPERTY LINE
—x— = WIRE FENCE

I, CHRISTOPHER K. PADERICK, PROFESSIONAL LAND SURVEYOR NO. 4189, CERTIFY THAT THIS SURVEY IS OF ANOTHER CATEGORY. TO WIT; AN EASEMENT SURVEY.

Christopher K. Paderick
L-4189

STATE OF NORTH CAROLINA HARNETT COUNTY

I, CHRISTOPHER K. PADERICK, CERTIFY THAT THIS PLAT WAS DRAWN UNDER MY SUPERVISION FROM AN ACTUAL SURVEY MADE UNDER MY SUPERVISION; (DEED DESCRIPTION RECORDED IN MAP & DEED BOOKS NOTED); THAT THE BOUNDARIES NOT SURVEYED ARE CLEARLY INDICATED AS DRAWN FROM INFORMATION REFERENCED HEREON; THAT THE RATIO OF PRECISION AS CALCULATED IS 1: 10,000±; THAT THIS PLAT WAS PREPARED IN ACCORDANCE WITH G.S. 47-30 AS AMENDED. WITNESS MY OFFICIAL SIGNATURE, REGISTRATION NUMBER AND SEAL THIS 11TH DAY OF FEBRUARY, A.D., 2007.

NORTH CAROLINA PROFESSIONAL SEAL L-4189 LAND SURVEYOR CHRISTOPHER K. PADERICK

Christopher K. Paderick
L-4189

CONSERVATION EASEMENT
SURVEY OF

THE BEAVERDAM SITE (MAP 3)
FOR
EBX NEUSE I, LLC

STEWART'S CREEK TWSP. FEBRUARY 11, 2007
HARNETT COUNTY, NC 1" = 200'

200' 100' 0 200' 400'
GRAPHIC SCALE

PIN 0585-85-1846
PIN 0585-66-7742
PIN 0585-74-5781

MAP 3 OF 3

MATRIX EAST, PLLC
PROFESSIONAL LAND SURVEYORS
908 N. QUEEN ST., SUITE A KINSTON, NC 28501
TEL: 252-522-2500 FAX: 252-522-4747

DRAWN BY: CKP	PROJECT NO.: 20060125
SURVEYED BY: RJO/LDL	DATE: 2/11/2007
SCALE: 1" = 200'	DRAWING NAME: SOUTH

Map # 2007-194

UNOFFICIAL DOCUMENT

HARNETT COUNTY
February 7, 1855
NORTH CAROLINA

KIMBERLY S. HARGROVE
REGISTER OF DEEDS, HARNETT
305 W CORNELIUS HARNETT BLVD
SUITE 200
LILLINGTON, NC 27546

****

Filed For Registration: 02/27/2007 12:39:00 PM

Book: PLAT 2007 **Page:** 192-195

Document No.: 2007003608

MAP 4 PGS $63.00

Recorder: TRUDI S WESTER

State of North Carolina, County of Harnett

KIMBERLY S. HARGROVE , REGISTER OF DEEDS

DO NOT DISCARD

2007003608

2007003608