**NC DEQ**
**Underground Storage Tank Section**

# Operating and Maintaining Underground Storage Tank Systems

**Revised January 2019**

# Table of Contents

**CHAPTER 1: INTRODUCTION ..... 1**
A. Why an Operation and Maintenance Manual? ..... 1
B. How Can This Booklet Help You? ..... 1
C. Who Should Read This Manual? ..... 2
D. How to Use This Manual ..... 2
E. How Can You Use the Checklists Effectively? ..... 2

**CHAPTER 2: IDENTIFYING THE EQUIPMENT AT YOUR UST FACILITY ..... 3**
A. Getting Started ..... 3
B. UST Equipment Checklist (Table 1) ..... 3

**CHAPTER 3: RELEASE DETECTION ..... 6**
A. What is Release Detection? ..... 6
B. What Are Your Release Detection Options? ..... 6
C. What Are Your Existing Release Detection Requirements? ..... 7
D. What Are Your Additional Release Detection Requirements? ..... 8
F. Do You Know if Your Release Detection Meets Performance Requirements? ..... 9
G. What Are Your Release Detection O&M Responsibilities at Your Site? ..... 9
H. Am I Required to Have Secondary Containment if my UST System is near drinking wells or protected surface waters? ..... 10
I. Leak Detection Methods Description and Requirements ..... 11
Automatic Tank Gauging (ATG) Systems ..... 11
Secondary Containment with Interstitial Monitoring (<11/1/2007) ..... 12
Secondary Containment with Interstitial Monitoring (≥ 11/1/2007) ..... 13
Statistical Inventory Reconciliation (SIR) ..... 14
Continuous In-Tank Leak Detection ..... 15
Vapor Monitoring ..... 16
Groundwater Monitoring ..... 17
Manual Tank Gauging ..... 18
Automatic Line Leak Detection (for pressurized piping only) ..... 20
Line Tightness Testing (for piping installed prior to 11/1/2007 only) ..... 21

**CHAPTER 4: KNOWN OR SUSPECTED RELEASES ..... 23**
A. Stop the Release ..... 23
B. Call for Help ..... 23
C. Contain the Spill or Overfill ..... 23
D. Report to Authorities and Investigate ..... 24

**CHAPTER 5: SPILL AND OVERFILL PREVENTION ..... 27**
A. Introduction ..... 27
B. What Are the Basics of Spill Prevention? ..... 28
C. Checklist for Spill Buckets ..... 29
D. What are the Basics of Overfill Prevention? ..... 30
E. How Can You Help the Delivery Person Avoid Overfills? ..... 30
F. What Should You Do to Operate and Maintain Your Automatic Shutoff Device? ..... 31
G. What Should You Do to Operate and Maintain Your Electronic Overfill Alarm? ..... 32
H. What Should You Do to Operate and Maintain Your Ball Float Valve? ..... 33
I. What are Your Responsibilities for Correct Filling Practices? ..... 34

**CHAPTER 6: CORROSION PROTECTION** ..... **36**
A. Overview ..... 36
B. Operation and Maintenance Checklist and Record Keeping Forms ..... 38
*C.* What If You Combine Internal Lining and Cathodic Protection? ..... 42

**CHAPTER 7: WALKTHROUGH INSPECTIONS** ..... **43**

**CHAPTER 8: RECORD KEEPING AND COMPLIANCE** ..... **45**
A. What Records Must You Keep? ..... 45
B. UST Record Keeping: The Basics ..... 45
C. Where Should You Keep Your Records? ..... 45

**CHAPTER 9: RESOURCES AND REFERENCES** ..... **54**
A. Contact Information ..... 54
B. Recommended Reading ..... 55
C. Internet Resources ..... 56

**CHAPTER 10: GLOSSARY** ..... **57**

# FIGURES

FIGURE 1 - RELEASE DETECTION METHODS ..... 7
FIGURE 2 - UST-16 MTG RECORD ..... 19
FIGURE 3 - RELEASE DETECTION RECORD ..... 22
FIGURE 4 - RELEASE RESPONSE CONTACT FORM ..... 26
FIGURE 5 - OVERFILL PREVENTION SIGN ..... 34
FIGURE 6 - UST-21 IMPRESSED CURRENT 60 DAY RECORD ..... 41

# TABLES

TABLE 1 - UST EQUIPMENT CHECKLIST ..... 4
TABLE 2 - SPILL BUCKET O & M CHECKLIST ..... 29
TABLE 3 - AUTO SHUTOFF DEVICE O & M CHECKLIST ..... 31
TABLE 4 - O & M CHECKLIST FOR OVERFILL ALARMS ..... 32
TABLE 5 - O & M CHECKLIST FOR BALL FLOAT VALVES ..... 33
TABLE 6 - CORRECT UST FILLING CHECKLIST ..... 35
TABLE 7 - CORROSION PROTECTION CHOICES ..... 37
TABLE 8 - O & M CHECKLIST FOR SACRIFICIAL ANODE CORROSION PROTECTION ..... 38
TABLE 9 - O & M CHECKLIST FOR IMPRESSED CURRENT CORROSION PROTECTION ..... 39
TABLE 10 - O & M CHECKLIST FOR INTERNALLY LINED TANKS ..... 40
TABLE 11 - UST COMPLIANCE RECORDS ..... 46
TABLE 12 - NORTH CAROLINA UST FORMS ..... 51

# Chapter 1: Introduction

## A. Why an Operation and Maintenance Manual?

This manual was developed to help owners and operators of Underground Storage Tank (UST) systems understand and organize all the operation and maintenance requirements that need to be done on a routine basis.

The passing of the December 22, 1998 deadline gave a number of people in the UST community the impression that the work to meet compliance was essentially over. Many thought that a recently installed or upgraded UST would provide a problem-free future for UST systems in North Carolina.

But the work is far from over. While owners and operators throughout North Carolina spent the 1990's achieving compliance with the 1998 upgrade requirements, many have not considered how to maintain compliance. Many owners and operators are unaware of the annual, monthly and even daily requirements needed to operate a UST system that is free of leaks, overfills, and corrosion. Without routine maintenance for identifying and correcting problems, it may only be a matter of time before your UST system fails.

This manual was designed to help meet the challenge of maintaining compliance. The UST system operation and maintenance requirements are organized into a simple, easy to read booklet.

## B. How Can This Booklet Help You?

This booklet can help you:

- Understand the 2015 US EPA UST regulation (NC DEQ adopted June 1, 2017) and its impact on regular operation and maintenance (O&M) procedures.
- Identify and understand the O&M procedures you should follow routinely to make sure your USTs do not leak and possibly damage the environment or endanger human health. These O&M procedures will help you avoid cleanup costs and liability concerns.
- Stay in compliance with NC's UST O&M requirements.
- Identify O&M records you must keep on file
- Train yourself and your employees on how to effectively operate and maintain your UST system.
- Discover small problems before they turn into large ones.
- Prepare for UST compliance inspections.
- Protect your investment by extending the life of your UST system using preventative maintenance.
- Avoid fines, penalties, and enforcement actions.

**Releases from USTs can threaten human health and the environment, contaminating both soil and groundwater supplies. As of 2015, more than 525,000 UST releases have been confirmed.**

**About half** of the United States population uses groundwater as a source of drinking water.

## C. Who Should Read This Manual?

- UST owners and operators.
- Any UST-facility employees who use or manage USTs.
- People who are considering the purchase or installation of an UST.

## D. How to Use This Manual

Read through each section carefully and use the checklists to help you establish clear O&M procedures.

- **Notes/Problems/Questions -** At the end of each chapter, make a list of questions or concerns you have. Contact NCDEQ UST Section for assistance (see Chapter 9: Resources and References for details). If you come across a term that is unfamiliar to you, a glossary of terms has been included for your convenience (see Chapter 10: Glossary).
- **Emergency Information –** Chapter 4: Known or Suspected Releases deals with what to do when you have a known or suspected release of petroleum. Fill out the Emergency Contact page and post it at the UST facility where staff can easily see it.
- **Annual Review -** You and your employees should review this manual once a year or whenever you may have questions about operating and maintaining UST systems.

*Key Terms*

*An* UST *is a storage tank and underground piping connected to the tank that has at least 10 percent of its combined volume underground. The federal regulation applies only to USTs storing petroleum, including biofuel blends, and certain hazardous substances.*

O&M *means operation and maintenance procedures that owners and operators must follow to keep UST systems from leaking, which can result in costly cleanups.*

**If you have questions, don't hesitate to call us at the UST Section Central Office (919) 707-8171.**

By identifying and understanding the O&M tasks you should perform routinely, you will help ensure timely repair or replacement of components when problems are identified.

**Throughout this document, bold type and orange updated boxes indicate new requirements in the 2015 US EPA UST regulation which were adopted by NC DEQ on June 1, 2017.**

## E. How Can You Use the Checklists Effectively?

You can select the specific mix of checklists that matches your UST facility. Once you identify your site-specific group of checklists, use them to perform operation and maintenance activities at your UST facility. Make several copies and complete them periodically.

By using these checklists, you can track your O&M activities and know you have done what was necessary to properly operate and maintain your UST system. Proper O&M activities help reduce releases of regulated substances to the environment.

# Chapter 2: Identifying the Equipment at Your UST Facility

## A. Getting Started

Before you learn about your specific operation and maintenance requirements, you need to know what type of UST system you have. Use this chapter to document the three major areas of prevention equipment at your UST system: release detection, spill and overfill prevention and corrosion protection. Once you are sure you know what you have, then read and answer the questions on all the following pages that apply.

## B. UST Equipment Checklist (Table 1)

Use Table 1 as a starting point to see if you have the right equipment. Take a few minutes and place a check beside the equipment that you have at your UST facility for each of your tanks. If you have more than one UST facility, feel free to make additional copies of the checklist.

If you are not sure about your equipment, or how to complete the checklists, **do not guess**. It is important to know exactly what you have, otherwise you will not be able to properly operate and maintain your system. Your UST equipment contractor should be able to help you identify what types of release detection, spill control, overfill prevention and corrosion protection equipment that you have. You may also contact a NCDEQ UST inspector for assistance in filling out this form. (For inspector contact information, please call 919-707-8171)

**If you do not know the type of equipment you have at your UST facility, you run the risk of not being able to maintain and operate your equipment properly.**

**Worse yet, you may not be able to determine if your equipment is working properly or if your system is leaking.**

**Remember Compatibility**

**If you store regulated substances containing greater than 10 percent ethanol or greater than 20 percent biodiesel (or any other regulated substance identified by NC DEQ), you must notify your NC DEQ at least 30 days prior to switching to the fuel by submitting a UST-20, "Alternative Fuel /Hazardous Substance Compatibility Checklist", form and supporting documentation. You must also keep records demonstrating you meet the compatibility requirement. Keep these records for as long as the UST system stores the regulated substance.**

# Table 1 - UST Equipment Checklist

## General Facility Information

| Facility Name | Facility ID # |
|---|---|
| | |

## Release Detection (See Chapter 3: Release Detection for more information)

**A. Release Detection for Tanks [1]**

| Check at least one for each tank (or tank compartment): | Tank #1 | Tank #2 | Tank #3 | Tank #4 |
|---|---|---|---|---|
| Automatic Tank Gauging (ATG) System | | | | |
| Continuous in-tank leak detection (e.g. CSLD, SCALD) | | | | |
| Interstitial Monitoring with Secondary Containment | | | | |
| Statistical Inventory Reconciliation (SIR) | | | | |
| Groundwater Monitoring | | | | |
| Vapor Monitoring | | | | |
| Manual Tank Gauging Only [2] | | | | |
| Other release detection method (please specify) | | | | |

1. If you install or replace a tank after November 1, 2007, it must have secondary containment and interstitial monitoring.
2. Allowed only for tanks of 550 gallon capacity or less or for up to 1000 gallon capacity and have a diameter of 48 or 64 inches.

**B. Release Detection for Pressurized Piping [1]**

| Check at least one from A and one from B for each tank's piping: | | | Tank #1 | Tank #2 | Tank #3 | Tank #4 |
|---|---|---|---|---|---|---|
| A (Automatic Line Leak Detectors) | Automatic Flow Restrictor | (common with Mechanical Line Leak Detectors) | | | | |
| | Automatic Shutoff Device | (common with Electronic Line Leak Detectors) | | | | |
| | Continuous Alarm | (common with Electronic Line Leak Detectors) | | | | |
| B | Annual Line Tightness Test | | | | | |
| | Monthly Monitoring (please specify) [2] | | | | | |

1. If you install or replace piping after November 1, 2007, it must have secondary containment and interstitial monitoring and have an automatic line leak detector.
2. Monthly Monitoring for piping includes Interstitial Monitoring, SIR, Electronic Line Leak Detectors, Vapor Monitoring and Groundwater Monitoring)

**C. Release Detection for Suction Piping [1]**

| Check at least one for each tank's piping: | Tank #1 | Tank #2 | Tank #3 | Tank #4 |
|---|---|---|---|---|
| Line Tightness Testing Every Three Years | | | | |
| Monthly Monitoring* (please specify) [2] | | | | |
| No Release Detection Required For "Safe Suction" [3] | | | | |

1. If you install or replace piping after November 1, 2007, it must have secondary containment and interstitial monitoring.
2. Monthly Monitoring for piping includes Interstitial Monitoring, Vapor Monitoring, Groundwater Monitoring, and SIR
3. No release detection is required if it can be verified by a UST equipment contractor and documented on a UST-19 Form that you have a "safe suction" (also known as "European" suction) piping system with the following characteristics (Only applies to piping installed prior to 11/1/2007):
   a) Only one check valve per line located directly below and as close as practical to the suction pump;
   b) Piping sloping back to the tank; and
   c) System operates below atmospheric pressure.

## Table 1 - UST Equipment Checklist

### Spill and Overfill Prevention (See Chapter 5: Spill and Overfill Prevention for more information)

| Check for each tank: | Tank #1 | Tank #2 | Tank #3 | Tank #4 |
|---|---|---|---|---|
| Spill Catchment Basin (Spill Bucket) | | | | |
| **Check at least one overfill device for each tank:** | | | | |
| Automatic Shutoff Device (Flapper Valve) | | | | |
| Overfill Alarm | | | | |
| Ball Float Valve<br>(New ball floats cannot be installed after 6/1/2017) | | | | |

### Corrosion Protection (See Chapter 6: Corrosion Protection for more information)

**A. Corrosion Protection for Tanks**

| Check at least one for each tank: | Tank #1 | Tank #2 | Tank #3 | Tank #4 |
|---|---|---|---|---|
| Coated and Cathodically Protected Steel (e.g., STI-p3 tank, sacrificial anodes or impressed current) | | | | |
| Noncorrodible Material (e.g., fiberglass reinforced plastic) | | | | |
| Steel Jacketed or Clad with Noncorrodible Material | | | | |
| Noncoated Steel with Cathodic Protection (e.g., sacrificial anodes or impressed current)* | | | | |
| Internally Lined Tank* | | | | |
| Noncoated Steel with Cathodic Protection (e.g., sacrificial anodes or impressed current) and Internally Lined* | | | | |

*These options may be used only for tanks installed before December 22, 1988.

**B. Corrosion Protection for Piping**

| Check at least one for each: | Tank #1 | Tank #2 | Tank #3 | Tank #4 |
|---|---|---|---|---|
| Coated and Cathodically Protected Steel (e.g., sacrificial anodes or impressed current) | | | | |
| Noncorrodible Material (e.g., fiberglass reinforced plastic or flexible plastic) | | | | |
| Noncoated Metal with Cathodic Protection (e.g., sacrificial anodes or impressed current)* | | | | |

* This option may be used only for piping installed before December 22, 1988.

**C. Corrosion Protection for Flex Connectors**

| Check at least one for each tank system: | Tank #1 | Tank #2 | Tank #3 | Tank #4 |
|---|---|---|---|---|
| Cathodically Protected (e.g., sacrificial anodes) | | | | |
| Flex Connectors Isolated from Soil (e.g., isolation boot, containment sump or soil completely removed from around flex connector) | | | | |

Note: UST piping systems that have flex connectors, generally have them located at the tank and dispenser.

# Chapter 3: Release Detection

## A. What is Release Detection?

You must be able to determine at least every 30 days whether or not your tank and piping are leaking by using proper release detection methods. The release detection methods, vapor monitoring and groundwater monitoring, are special exceptions and must be monitored at least every 14 days. Be aware that the phrases "release detection" and "leak detection" are often used interchangeably.

Your release detection method must be able to detect a release from any portion of the tank and connected underground piping that routinely contains product.

Release detection must be installed, calibrated, operated, and maintained according to the manufacturer's instructions.

## B. What Are Your Release Detection Options?

For tanks installed before November 1, 2007, you can use any of these release detection methods:

- Automatic Tank Gauging (ATG) Systems
- Interstitial Monitoring with Secondary Containment
- Statistical Inventory Reconciliation (SIR)
- Continuous in-tank leak detection
- Groundwater Monitoring
- Vapor Monitoring
- Manual Tank Gauging
- Other methods meeting performance standards or approved by NC DEQ.

UPDATED

**Tanks and piping installed or replaced after November 1, 2007 must have secondary containment with interstitial monitoring, including piping that is considered safe suction piping.** Pressurized piping must continue to have an automatic line leak detector.

For underground piping installed before November 1, 2007, you may use any of the release detection methods listed below:

**Pressurized Piping –**

The methods of release detection are:

- Automatic Line Leak Detector (capable of detecting a 3.0 gallon per hour catastrophic leak)

  **-Plus one of the following-**

  - Annual Line Tightness Testing
  - Monthly monitoring (e.g., SIR, secondary containment with interstitial monitoring, groundwater monitoring or vapor monitoring)

**The 2015 Federal UST regulation removes the deferral for field-constructed tanks and airport hydrant systems, making them subject to all of the UST requirements. Because these UST systems can be large and unique, some requirements are different from those described in this booklet. Therefore, these systems are not covered in this booklet. Please see EPA's field-constructed tanks and airport hydrant systems website at www.epa.gov/ust/field-constructed-tanks-and-airport-hydrant-systems-2015-requirements.**

**No later than October 13, 2018, emergency generator USTs installed before November 1, 2007 must meet the release detection requirements described in this booklet. Emergency generators installed after November 1, 2007 must meet the secondary containment release detection requirements at installation.**

**-OR-**

- Electronic Line Leak Detector capable of detecting a 0.2 gallon per hour leak on a monthly basis and a 3.0 gallon per hour catastrophic leak continuously

**Standard Suction Piping –**

- For suction piping that does not meet the definition of "Safe" or "European" suction (see definition below), the two forms of release detection are:
- Line Tightness Testing every three years
- Monthly monitoring (e.g., SIR, secondary containment with interstitial monitoring, groundwater monitoring or vapor monitoring)

**Safe Suction Piping -**

Suction piping is considered safe suction piping if it:

- Is below-grade piping that operates under atmospheric pressure;
- Slopes enough so that the product in the pipe can drain back into the tank when suction is released; and
- Has only one check valve, which is as close as possible beneath the pump in the dispensing unit.

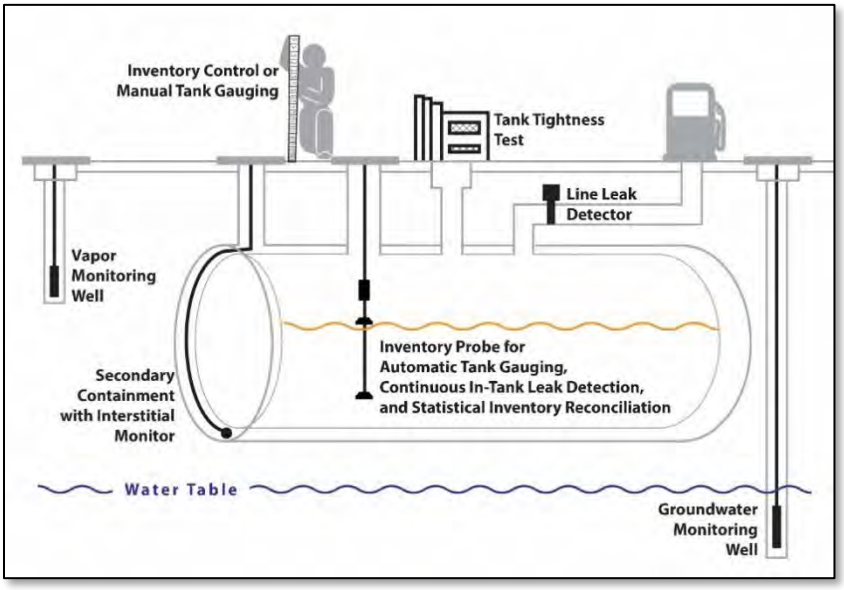


**Figure 1 - Release Detection Methods**

## C. What Are Your Existing Release Detection Requirements?

You must use proper release detection methods to determine at least every 30 days whether your tank and piping are leaking.

Your release detection method must be able to detect a leak from any portion of the tank and connected underground piping that routinely contains product.

You must keep the following records:

- Proof that performance claims, including probabilities of detection and false alarm, are met and the means by which performance was determined by either the equipment manufacturer or installer. You must maintain these records for at least five years.
- Results of any sampling, testing, or monitoring, except tank tightness tests, must be maintained for at least one year. You must maintain results of tank tightness tests until the next test is conducted.
- All calibration, maintenance, and repair of release detection equipment permanently located on site must be maintained for at least one year after servicing work is completed.
- Any schedules of required calibration and maintenance provided by equipment manufacturers must be retained for five years from the date of installation.

## D. What Are Your Additional Release Detection Requirements?

UPDATED

**No later than October 13, 2018, you must conduct your first annual test of your release detection equipment for proper operation. The testing must be conducted according to one of the following: manufacturer's instructions; a code of practice developed by a nationally recognized association or independent testing laboratory; or requirements your implementing agency determines are no less protective of human health and the environment than the other two options. Minimum requirements for testing various release detection components are covered under each release detection checklist. You must keep records of this testing for at least three years. Document the annual release detection testing on the UST-22B, "Annual Leak Detection Equipment Operability Check".**

UPDATED

**No later than October 13, 2018, you must conduct your first periodic walkthrough inspection of your release detection equipment. You must keep records on a UST-27, "Monthly Walkthrough Inspections", form for at least one year. See more information about walkthrough inspections in Chapter 7: Walkthrough Inspections.**

UPDATED

**No later than October 13, 2018, if you use groundwater or vapor monitoring for release detection, you must demonstrate proper installation and performance through a site assessment. You must maintain the site assessment for as long as the method is used for release detection at your facility. Site assessments completed after October 13, 2015, must be signed by a licensed professional.**

*Remember, your release detection method must meet specific performance requirements relating to its ability to detect a release. You must also ensure you use a method appropriate to your UST system and the product you store.*

## E. What About Compatibility?

UPDATED

**If you store regulated substances containing greater than 10 percent ethanol or greater than 20 percent biodiesel or any other regulated substance identified by NC DEQ, keep records demonstrating compatibility of the UST equipment and release detection components, such as probes and sensors, in contact with the regulated substance for as long as the UST system stores the regulated substance. You must submit a UST-20, "Alternative Fuel/Hazardous Substance Compatibility Checklist", for approval prior to switching.**

## F. Do You Know if Your Release Detection Meets Performance Requirements?

Release detection must meet specific performance requirements. UST system owners and operators must keep written verification of equipment performance. Equipment manufacturers or installers provide this verification. Some equipment vendors or manufacturers supply their own performance documentation, but more often an impartial third party is paid to test the release detection equipment and certify that performance requirements are met. An independent workgroup of release detection experts periodically reviews and maintains a list of submitted third-party certifications, thus providing a free and reliable list of evaluations of third-party certifications for various release detection equipment. Frequently updated, this list is available at www.nwglde.org; the publication is *List of Leak Detection Evaluations For Storage Tank Systems*. If you cannot find the performance documentation, contact NC DEQ/UST at (919) 707-8171.

You should check the performance documentation to ensure your method is appropriate for use with your UST system equipment. By checking the documentation, you may discover the method you use has not been approved for use with the type of tank or piping you have. For example, you may learn from the documentation that your method will not work with manifolded tanks, certain products, high throughput, certain tank sizes or require 50% or more product volume in the tank for a test to be valid. That is why you must make sure your release detection method has clear performance documentation stating it will work effectively at your site with its specific characteristics.

## G. What Are Your Release Detection O&M Responsibilities at Your Site?

If you don't understand your operation and maintenance responsibilities and don't know what operation and maintenance tasks you must routinely perform, your UST site could become contaminated through spill, overfills, or releases from UST equipment. Then, you might face high cleanup costs, run the risk of lowering the value of your property and potentially open yourself up to lawsuits.

To avoid these problems, use the checklists on the following pages that describe each type of leak detection method, discuss actions necessary for proper operation and maintenance, and note the records you should keep.

Locate the methods of release detection you are using at your facility, review these pages, and periodically complete the checklist. You might want to copy a page first and periodically fill out copies later.

If you have questions about your release detection system, review your owner's manual or call the vendor or manufacturer of your system. A NCDEQ UST inspector may also be able to provide assistance.

You will find sample leak detection record keeping forms in the following pages of this section. Keeping these records increases the likelihood that you are conducting good operation and maintenance and providing effective release detection at your UST site. For example, see page 22 for a "30-Day Release Detection Monitoring Record" form.

If you ever suspect or confirm a leak, refer to Chapter 4: Known or Suspected

Releases. **Never ignore leak detection alarms or failed leak detection tests. Treat them as potential leaks**!

## H. Am I Required to Have Secondary Containment if my UST System is near drinking wells or protected surface waters?

UST systems located between 100 and 500 feet of wells serving public water supplies, between 50 and 100 feet of any other well used for human consumption and within 500 feet of protected surface waters are required to have secondary containment and interstitial monitoring. Protected surface waters include any that the State has designated as High Quality Water (HQW), Outstanding Resource Water (ORW), Water Supply I, Water Supply II and Shellfishing. Please contact the Division of Water Resources at 919-807-6300 or visit their web page at,
https://ncdenr.maps.arcgis.com/apps/webappviewer/index.html?id=6e125ad7628f494694e259c80dd64265
to determine if surface waters near you meet the above classifications.

For UST systems installed on or after January 1, 1991 and before April 1, 2001, an extended deadline for the tank to meet the secondary containment requirements has been established of January 1, 2020 (The piping upgrade deadline for all tanks has already passed). During this extension these sites must conduct enhanced leak detection, which is a combination of more stringent release detection monitoring and well sampling.

The basic requirements of enhanced leak detection are:

- Install a standard or continuous automatic tank gauge (ATG) for each UST. For a standard ATG, conduct at least one valid 0.1 gallon per hour (gph) leak test per month or one valid 0.2 gph leak test per week. For a continuous ATG, conduct at least one valid 0.2 gph leak test per week.

  Note: A standard ATG collects product levels and temperature from a UST for a period of time and then performs a leak test. A UST system must be shut down while a leak test is in progress. A continuous ATG continuously collects data and performs a leak test whenever enough acceptable data has been collected. With a continuous ATG, a UST system does not need to be taken out of service while a leak test is in progress.

- Public Water Supply wells located between 100 and 500 feet from the UST system and any other well used for human consumption located between 50 and 100 feet from the UST system must be sampled once per year for volatile organic compounds (VOCs) and semi-volatile organic compounds (SVOCs). If the UST system contains waste oil, the wells must also be sampled for lead and chromium. Samples must be collected and laboratory results received by your UST Regional office by October 1st of each year.

For detailed information on this topic please consult the NCDEQ-UST brochure “Siting and Secondary Containment Requirements for Underground Storage Tank Systems near Wells and Surface Waters” available at http://www.wastenotnc.org or by calling the UST Central Office at 919-707-8171.

# I. Leak Detection Methods Description and Requirements

| Automatic Tank Gauging (ATG) Systems (for tanks installed prior to 11/1/2007 only) | |
|---|---|
| **Description** | *An automatic tank gauging (ATG) system consists of a probe permanently installed in a tank and wired to a monitor to provide information on product level and temperature. ATG systems automatically calculate the changes in product volume that can indicate a leaking tank.* |
| **Performance Claims** | ☐ Make sure your ATG system is certified for the types of tanks and stored contents on which the ATG system is used. Manufacturers are required to have their leak detection devices tested and certified by a third party to verify that their equipment meets specific performance requirements set by regulatory agencies. If you don't have a third-party certification (sometimes called a certified performance claim), have the manufacturer provide it to you. |
| **Perform These O&M Actions** | ☐ Use your ATG system to test for leaks at least every 30 days. Most systems are already programmed by the installer to run a leak test periodically. If your system is not programmed to automatically conduct the leak test, refer to your ATG system manual to identify which buttons to push to conduct the leak test. Testing more often than monthly can catch leaks sooner and reduce cleanup costs and problems.<br>☐ Make sure that the amount of product in your tank is sufficient to run the ATG leak test. The tank must contain a minimum amount of product to perform a valid leak detection test. For example, some ATG systems need 50% or more volume for a leak detection test to be valid. One source for determining that minimum amount is the performance documentation for your leak detection equipment (as discussed above).<br>UPDATED ☐ **No later than October 13, 2018, you must begin inspecting and testing your ATG system every year. At a minimum, test the alarm, battery back-up, and verify the system configuration. For probes and sensors, you must inspect for residual build-up, ensure floats move freely, ensure the shaft is not damaged, ensure accessible cables are free of kinks and breaks, and test alarm operability and communication with controller. Use the UST-22B, "Annual Leak Detection Equipment Operability Check", form to document.**<br>UPDATED ☐ **No later than October 13, 2018, you must begin performing periodic walkthrough inspections. See Chapter 7: Walkthrough Inspections for more information about these required walkthrough inspections. Use the UST-27, "Monthly Walkthrough Inspections, form to document.**<br>☐ If your ATG ever fails a test or indicates a release, see Chapter 4: Known or Suspected Releases of this booklet for information on what to do next.<br>☐ Make sure employees who run, monitor, or maintain the release detection system know exactly what they have to do and to whom they need to report problems. UST owners must have a trained primary operator for each UST facility. |
| **Keep These O&M Records** | ☐ Keep results of your ATG systems 30-day release detection monitoring for at least one year. Your monitoring equipment may provide printouts that can be used as records. Unless you are recording actual release detection results at least every 30 days and maintaining records for at least one year, you are not doing leak detection right.<br>UPDATED ☐ **Keep results for your annual ATG system operation tests for at least three years.**<br>☐ Keep all records of calibration, maintenance, and repair of your release detection equipment for at least one year.<br>☐ Keep all performance claims supplied by the installer, vendor, or manufacturer for at least five years.<br>UPDATED ☐ **Keep your periodic walkthrough inspection records for at least one year.**<br>UPDATED ☐ **If you store regulated substances containing greater than 10 percent ethanol or greater than 20 percent biodiesel or a hazardous substance, keep records demonstrating compatibility for as long as the UST system stores the regulated substance. Prior to storage of the above substances you must submit a UST-20, "Alternative Fuel/Hazardous Substance Compatibility Checklist", for approval.** |

| Secondary Containment with Interstitial Monitoring (<11/1/2007)<br>(for tanks, piping, and sumps installed prior to 11/1/2007) | |
|---|---|
| **Description** | *Secondary containment with interstitial monitoring is a method of leak detection where tanks and/or piping of double-wall construction have the space between the inner and outer wall – called the interstitial space – monitored manually or automatically for evidence of a leak. For tanks, the interstitial space is typically monitored directly. For piping, typically double-walled piping will slope back to a sump such that any product leaking from the inner wall will drain back to the sump and a sump sensor can detect it.* |
| **Performance Claims** | ☐ Make sure your interstitial monitoring equipment and any sensors are certified for the types of tanks, piping, and stored contents on which the release detection system is used. |
| **Perform These O&M Actions** | ☐ Use your release detection system to test for leaks at least every 30 days. Testing more often than monthly can catch leaks sooner and reduce cleanup costs and problems.<br>UPDATED ☐ **No later than October 13, 2018, you must begin inspecting and testing your release detection system every year. You must inspect probes and sensors for residual build-up, ensure floats move freely, ensure the shaft is not damaged, ensure accessible cables are free of kinks and breaks, and test alarm operability and communication with the controller. Use the UST-22B, "Annual Leak Detection Equipment Operability Check", form to document.**<br>UPDATED ☐ **No later than October 13, 2018, you must begin testing all containment sumps used for piping interstitial monitoring every three years for liquid tightness or use a double-walled containment sump with annual interstitial monitoring. Use the UST-23B, "Triennial UST Containment Sump/UDC Integrity Testing", form to document.**<br>☐ **No later than October 13, 2018, you must begin performing periodic walkthrough inspections. See Chapter 7: Walkthrough Inspections for more information about these required walkthrough inspections. Use the UST-27, "Monthly Walkthrough Inspections, form to document.**<br>UPDATED ☐ **If you repair any secondary containment areas, you must test them for tightness within 30 days after the repair.**<br>☐ If your interstitial monitoring ever fails a test or indicates a release, see Chapter 4: Known or Suspected Releases of this booklet for information on what to do next.<br>☐ Keep interstitial monitoring access ports clearly marked and secured.<br>☐ Make sure employees who run, monitor, or maintain the release detection system know exactly what they have to do and to whom to report problems. UST owners must have a trained primary operator for each UST facility. |
| **Keep These O&M Records** | ☐ Keep results of your 30-day release detection monitoring for at least one year. Your monitoring equipment may provide printouts that can be used as records. The types of reports that you need to printout are interstitial sensor alarm history and sensor status reports. If your equipment does not provide printouts, you may use the Release Detection Monitoring Record form on page 20 to document your results. Unless you are recording actual release detection results at least every 30 days and maintaining records for at least one year, you are not doing leak detection right.<br>UPDATED ☐ **Keep results for your annual release detection system operation tests for at least three years.**<br>☐ Keep all records of calibration, maintenance, and repair of your release detection equipment for at least one year.<br>☐ Keep all performance claims supplied by the installer, vendor, or manufacturer for at least five years.<br>☐ **Keep your periodic walkthrough inspection records for at least one year.**<br>UPDATED ☐ **Keep records of containment sump testing for three years or keep documentation showing the containment sump is double-walled and the integrity of both walls is periodically monitored for as long as containment sump testing is not performed.** See page 22 for a sample recordkeeping form for the test.<br>UPDATED ☐ **If you store regulated substances containing greater than 10 percent ethanol or greater than 20 percent biodiesel or a hazardous substance, keep records demonstrating compatibility for as long as the UST system stores the regulated substance. Prior to storage of the above substances you must submit a UST-20, "Alternative Fuel/Hazardous Substance Compatibility Checklist", for approval.** |

| Secondary Containment with Interstitial Monitoring (≥ 11/1/2007)<br>(for tanks, piping, and sumps installed on or after 11/1/2007) | |
|---|---|
| **Description** | *Secondary containment with interstitial monitoring is a method of leak detection where tanks and/or piping of double-wall construction have the space between the inner and outer wall – called the interstitial space – monitored automatically for evidence of a leak.* |
| **Performance Claims** | ☐ Make sure your interstitial monitoring equipment and any sensors are certified for the types of tanks, piping, and stored contents on which the release detection system is used. |
| **Perform These O&M Actions** | ☐ Use your release detection system to test for leaks at least every 30 days. Testing more often than monthly can catch leaks sooner and reduce cleanup costs and problems.<br>☐ Release detection equipment for UST systems installed on or after 11/1/2007 must be inspected and tested every year. You must inspect probes and sensors for residual build-up, ensure floats move freely, ensure the shaft is not damaged, ensure accessible cables are free of kinks and breaks, and test alarm operability and communication with the controller. **Use the UST-22B, "Annual Leak Detection Equipment Operability Check", form to document.**<br>☐ Tanks not monitored by pressure, vacuum, or hydrostatic methods must have the interstice precision tightness tested every three years. **Use the UST-23D, "Triennial UST Interstice Integrity Testing", form to document.**<br>☐ All piping whether it is pressurized, suction, a manifold line, or remote fill piping must have the interstice and primary sections of the piping tightness tested every three years if it is not monitored by pressure, vacuum, or hydrostatic methods every 30 days. The interstice must be tested in accordance with the manufacturers instruction or a national standard such as PEI RP 1200. The primary section of the pipe must be tested with a certified tightness test by trained personnel. **Use the UST-23C, "Triennial UST Piping Integrity Testing", form to document.**<br>☐ Containment Sumps installed on or after 11/1/2007 must be tested every three years for liquid tightness. If you have double-walled containment sump monitored by pressure, vacuum, or hydrostatic methods then the tightness test is not required. **Use the UST-23B, "Triennial UST Containment Sump/UDC Integrity Testing", form to document.**<br>UPDATED ☐ **No later than October 13, 2018, you must begin performing periodic walkthrough inspections.** Annual visual inspections of containment sumps are already required for any containment sump installed on or after 11/1/2007. **See Chapter 7: Walkthrough Inspections for more information about these required walkthrough inspections. Use the UST-27, "Monthly Walkthrough Inspections, form to document.**<br>UPDATED ☐ **If you repair any secondary containment areas, you must test them for tightness within 30 days after the repair.**<br>☐ If your interstitial monitoring ever fails a test or indicates a release, see Chapter 4: Known or Suspected Releases of this booklet for information on what to do next.<br>☐ Keep interstitial monitoring access ports clearly marked and secured.<br>☐ Make sure employees who run, monitor, or maintain the release detection system know exactly what they have to do and to whom to report problems. UST owners must have a trained primary operator for each UST facility. |
| **Keep These O&M Records** | ☐ Keep results of your 30-day release detection monitoring for at least one year. Your monitoring equipment is required to provide printouts of these records. The types of reports that you need to printout are interstitial sensor alarm history and sensor status reports. Unless you are printing your release detection results at least every 30 days and maintaining records for at least one year, you are not doing leak detection right.<br>UPDATED ☐ **Keep results for your annual release detection system operation tests for at least three years.**<br>☐ Keep all records of calibration, maintenance, and repair of your release detection equipment for at least one year.<br>☐ Keep all performance claims supplied by the installer, vendor, or manufacturer for at least five years.<br>☐ **Keep your periodic walkthrough inspection records for at least one year.**<br>UPDATED ☐ Keep records of all integrity testing for three years if the component is not double walled and monitored by pressure, vacuum, or hydrostatic methods every 30 days.<br>UPDATED ☐ **If you store regulated substances containing greater than 10 percent ethanol or greater than 20 percent biodiesel or a hazardous substance, keep records demonstrating compatibility for as long as the UST system stores the regulated substance. Prior to storage of the above substances you must submit a UST-20, "Alternative Fuel/Hazardous Substance Compatibility Checklist", for approval.** |

| Statistical Inventory Reconciliation (SIR)<br>(for tanks and piping installed prior to 11/1/2007 only) | |
|---|---|
| **Description** | *SIR is a method in which a trained professional uses sophisticated computer software to conduct a statistical analysis of inventory, delivery, and dispensing data. You must supply the professional with data every month. The result of the analysis may be PASS, INCONCLUSIVE, or FAIL.* |
| **Performance Claims** | ☐ Make sure your SIR vendor's methodology is certified for the types of tanks, piping, and product on which you use SIR. |
| **Perform These O&M Actions** | ☐ Supply daily inventory data to your SIR vendor at least every 30 days or use your computer software at least every 30 days to test your tank for leaks. You must submit your SIR data so that you have a 0.2 gph leak rate test within 30 days of the previous months test result.<br>☐ If your statistical inventory reconciliation ever fails a test or indicates a release, see Chapter 4: Known or Suspected Releases of this booklet for information on what to do next.<br>☐ If you receive an "inconclusive" result, you must treat the result the same as you would for a failed leak test. See Chapter 4: Known or Suspected Releases for more information on reporting suspected releases.<br>UPDATED ☐ **No later than October 13, 2018, you must begin performing periodic walkthrough inspections. See Chapter 7: Walkthrough Inspections for more information about these required walkthrough inspections. Use the UST-27, "Monthly Walkthrough Inspections, form to document**<br>UPDATED ☐ **No later than October 13, 2018, you must begin inspecting and testing your release detection system every year. If you use an ATG system to gather SIR data, annually test your ATG system. At a minimum, test the alarm, battery backup, and verify the system configuration. For probes and sensors, you must inspect for residual buildup, ensure floats move freely, ensure the shaft is not damaged, ensure accessible cables are free of kinks and breaks, and test alarm operability and communication with controller. Use the UST-22B, "Annual Leak Detection Equipment Operability Check", form to document.**<br>☐ Measure the water in your tank to the nearest one-eighth inch at least once a month and record the results on the SIR data sheet. You can use a paste that changes color when it comes into contact with water. An increase in water in a tank can indicate a failure of the tank and should be investigated as a suspected release. See Chapter 4: Known or Suspected Releases for more information on reporting suspected releases.<br>☐ If you stick your tank to gather data for the SIR vendor or your software, make sure your stick can measure to one-eighth of an inch and can measure the level of product over the full range of the tank's height. You should check your measuring stick periodically to make sure that you can read the markings and numbers and that the bottom of the stick is not worn.<br>☐ Make sure employees who run, monitor, or maintain the release detection system know exactly what they have to do and to whom to report problems. UST owners must have a trained primary operator for each UST facility. |
| **Keep These O&M Records** | ☐ Keep results of your 30-day release detection monitoring for at least one year. Unless you are keeping records of the 30-day release detection results and maintaining those records for at least one year, you are not doing leak detection right.<br>UPDATED ☐ **Keep results for your annual release detection system operation tests for at least three years.**<br>☐ If you manually stick your USTs then you need to keep the daily stick readings, which show the product height in inches, for at least one year.<br>☐ If you use an ATG system, keep all records of calibration, maintenance, and repair of your release detection equipment for at least one year.<br>☐ Keep all performance claims supplied by the installer, vendor, or manufacturer for at least five years. This includes the documentation of the SIR method discussed above.<br>UPDATED ☐ **Keep your periodic walkthrough inspection records for at least one year.**<br>UPDATED ☐ **If you store regulated substances containing greater than 10 percent ethanol or greater than 20 percent biodiesel or a hazardous substance, keep records demonstrating compatibility for as long as the UST system stores the regulated substance. Prior to storage of the above substances you must submit a UST-20, "Alternative Fuel/Hazardous Substance Compatibility Checklist", for approval.**<br>☐ Keep the records of investigations conducted as a result of any monthly monitoring conclusion of "Inconclusive" or "Fail" for at least one year. This may include the results of a tightness test performed during the investigation or a re-evaluation based on corrected delivery or dispenser data. |

| Continuous In-Tank Leak Detection (for tanks installed prior to 11/1/2007 only) | |
|---|---|
| **Description** | Continuous in-tank leak detection (CITLD) encompasses all statistically based methods where the system incrementally gathers measurements on an uninterrupted or nearly uninterrupted basis to determine a tank's leak status. There are two major groups that fit into this category: continuous statistical leak detection (also referred to as continuous automatic tank gauging methods) and continual reconciliation. Both groups typically use sensors permanently installed in the tank to obtain inventory measurements. They are combined with a microprocessor in the ATG system or other control console that processes the data. Continual reconciliation methods are further distinguished by their connection to dispensing meters that allow for automatic recording and use of dispensing data in analyzing tanks' leak status.<br><br>CITLD must operate on an uninterrupted basis or operate within a process that allows the system to gather incremental measurements to determine the leak status of the tank at least once every 30 days. |
| **Performance Claims** | ☐ Make sure your system is certified for the types of tanks and stored contents on which the system is used. Manufacturers are required to have their leak detection devices tested and certified by a third party to verify that their equipment meets specific performance requirements set by regulatory agencies. If you don't have a third-party certification (sometimes called a certified performance claim), have the manufacturer provide it to you. |
| UPDATED<br>UPDATED<br>**Perform These O&M Actions** | ☐ **No later than October 13, 2018, you must begin performing periodic walkthrough inspections. See Chapter 7: Walkthrough Inspections for more information about these required walkthrough inspections. Use the UST-27, "Monthly Walkthrough Inspections, form to document.**<br>☐ **No later than October 13, 2018, you must begin inspecting and testing your release detection system every year. At a minimum, test the alarm, battery backup, and verify the system configuration. For probes and sensors, you must inspect for residual buildup, ensure floats move freely, ensure the shaft is not damaged, ensure accessible cables are free of kinks and breaks, and test alarm operability and communication with controller. Use the UST-22B, "Annual Leak Detection Equipment Operability Check", form to document.**<br>☐ If your CITLD method ever fails a test or indicates a release, see Chapter 4: Known or Suspected Releases for information on what to do next.<br>☐ Make sure employees who run, monitor, or maintain the release detection system know exactly what they have to do and to whom to report problems. UST owners must have a trained primary operator for each UST facility. |
| UPDATED<br>UPDATED<br>UPDATED<br>**Keep These O&M Records** | ☐ Keep results of your 30-day release detection monitoring for at least one year. Your monitoring equipment may provide printouts that can be used as records. A sample 30-day recordkeeping form is provided on page 22.<br>☐ **Keep results for your annual release detection system operation tests for at least three years.**<br>☐ Keep all records of calibration, maintenance, and repair of your release detection equipment for at least one year.<br>☐ Keep any schedules of required calibration and maintenance provided by the release detection equipment manufacturer for at least five years from the date of installation.<br>☐ Keep all performance claims supplied by the installer, vendor, or manufacturer for at least five years.<br>☐ **Keep your periodic walkthrough inspection records for at least one year.**<br>☐ **If you store regulated substances containing greater than 10 percent ethanol or greater than 20 percent biodiesel or a hazardous substance, keep records demonstrating compatibility for as long as the UST system stores the regulated substance. Prior to storage of the above substances you must submit a UST-20, Alternative Fuel/Hazardous Substance Compatibility Checklist, for approval.** |

| Vapor Monitoring<br>(for tanks and piping installed prior to 11/1/2007 only) | |
|---|---|
| **Description** | *Vapor monitoring measures product vapors in the soil at the UST site to check for a leak. A site assessment performed by a North Carolina Licensed Geologist must determine the number and placement of monitoring wells that make sure a release is detected. NOTE: vapor monitors will not work well with substances that do not easily vaporize (such as diesel fuel).* |
| **Performance Claims** | ☐ Make sure your vapor monitoring equipment is certified for the types of contents stored on which the release detection system is used. |
| **Perform These O&M Actions** | ☐ Use your release detection system to test for leaks at least every 14 days. Testing more often than required can catch leaks sooner and reduce cleanup costs and problems. Be sure you check all of your vapor monitoring wells.<br>☐ If your vapor monitoring ever fails a test or indicates a release, see Chapter 4: Known or Suspected Releases of this booklet for information on what to do next.<br>UPDATED ☐ **No later than October 13, 2018, you must begin performing periodic walkthrough inspections. These inspections include checking your hand-held equipment for operability and serviceability. See Chapter 7: Walkthrough Inspections for more information about these required walkthrough inspections. Use the UST-27, "Monthly Walkthrough Inspections, form to document.**<br>UPDATED ☐ **No later than October 13, 2018, if you use vapor monitoring for release detection, you must demonstrate proper installation and performance through a site assessment. You must maintain a site assessment for as long as vapor monitoring is used for release detection at your facility. Site assessments completed after October 13, 2015 must be signed by a licensed professional.**<br>☐ Frequently test your release detection system according to the manufacturer's instructions to make sure it is working properly. Don't assume that your release detection system is working and never needs checking.<br>UPDATED ☐ **No later than October 13, 2018, you must begin inspecting and testing your release detection system every year. If you use permanently installed electronic equipment for vapor monitoring, at a minimum, test the alarm, battery backup, and verify the system configuration. For probes and sensors, you must inspect for residual buildup, ensure floats move freely, ensure the shaft is not damaged, ensure accessible cables are free of kinks and breaks, and test alarm operability and communication with controller. Use the UST-22B, "Annual Leak Detection Equipment Operability Check", form to document.**<br>☐ Keep your vapor monitoring wells clearly marked and secured.<br>☐ Check your vapor monitoring system owner's manual often to answer questions and to make sure you know the system's operation and maintenance procedures.<br>☐ Make sure employees who run, monitor, or maintain the release detection system know exactly what they have to do and to whom to report problems. UST owners must have a trained primary operator for each UST facility. |
| **Keep These O&M Records** | ☐ Keep results of your 14-day release detection monitoring for at least one year. Your monitoring equipment may provide printouts that can be used as records. If your equipment does not provide printouts, you may use the Release Detection Monitoring Record form on page 20 to document your results. Unless you are recording actual release detection results at least every 14 days and maintaining records for at least one year, you are not doing leak detection right.<br>UPDATED ☐ **Keep results for your annual release detection system operation tests for at least three years.**<br>☐ Keep all records of calibration, maintenance, and repair of your release detection equipment for at least one year.<br>☐ Keep any schedules of required calibration and maintenance provided by the release detection equipment manufacturer for at least five years from the date of installation.<br>☐ Keep all performance claims supplied by the installer, vendor, or manufacturer for at least five years. These records include the certification of your leak detection equipment described above.<br>UPDATED ☐ **Keep your periodic walkthrough inspection records for at least one year.**<br>UPDATED ☐ **If you store regulated substances containing greater than 10 percent ethanol or greater than 20 percent biodiesel or a hazardous substance, keep records demonstrating compatibility for as long as the UST system stores the regulated substance. Prior to storage of the above substances you must submit a UST-20, Alternative Fuel/Hazardous Substance Compatibility Checklist, for approval.** |

| Groundwater Monitoring<br>(for tanks and piping installed prior to 11/1/2007 only) | |
|---|---|
| **Description** | *Groundwater monitoring looks for the presence of liquid product floating on the groundwater at the UST site. A site assessment performed by a North Carolina Licensed Geologist must determine the number and placement of monitoring wells that make sure a release is detected. NOTE: this method cannot be used at sites where groundwater is more than 20 feet below the ground surface.* |
| **Performance Claims** | ☐ Make sure your groundwater monitoring equipment is certified for the types of contents stored on which the release detection system is used. Manufacturers are required to have their leak detection devices tested and certified by a third party to verify that their equipment meets specific performance requirements set by regulatory agencies. If you don't have a third-party certification (sometimes called a certified performance claim), have the manufacturer provide it to you. |
| **Perform These O&M Actions** | ☐ Use your release detection system to test for leaks at least every 14 days. Testing more often than required can catch leaks sooner and reduce cleanup costs and problems. Be sure you check all of your groundwater monitoring wells.<br>☐ If your groundwater monitoring indicates a release, see Chapter 4: Known or Suspected Releases of this booklet for information on what to do next.<br>UPDATED ☐ **No later than October 13, 2018, you must begin performing periodic walkthrough inspections. These inspections include checking your hand-held equipment for operability and serviceability. See Chapter 7: Walkthrough Inspections for more information about these required walkthrough inspections. Use the UST-27, "Monthly Walkthrough Inspections, form to document.**<br>UPDATED ☐ **No later than October 13, 2018, if you use vapor monitoring for release detection, you must demonstrate proper installation and performance through a site assessment. You must maintain a site assessment for as long as vapor monitoring is used for release detection at your facility. Site assessments completed after October 13, 2015 must be signed by a licensed professional.**<br>☐ Frequently test your release detection system according to the manufacturer's instructions to make sure it is working properly. Don't assume that your release detection system is working and never needs checking.<br>UPDATED ☐ **No later than October 13, 2018, you must begin inspecting and testing your release detection system every year. If you use permanently installed electronic equipment for groundwater monitoring, at a minimum, test the alarm, battery backup, and verify the system configuration. For probes and sensors, you must inspect for residual buildup, ensure floats move freely, ensure the shaft is not damaged, ensure accessible cables are free of kinks and breaks, and test alarm operability and communication with controller. Use the UST-22B, "Annual Leak Detection Equipment Operability Check", form to document.**<br>☐ Keep your groundwater monitoring wells clearly marked and secured.<br>☐ Check your groundwater monitoring system owner's manual often to answer questions and to make sure you know the system's operation and maintenance procedures.<br>☐ Make sure employees who run, monitor, or maintain the release detection system know exactly what they have to do and to whom to report problems. UST owners must have a trained primary operator for each UST facility. |
| **Keep These O&M Records** | ☐ Keep results of your 14-day release detection monitoring for at least one year. Your monitoring equipment may provide printouts that can be used as records. If your equipment does not provide printouts, you may use the Release Detection Monitoring Record form on page 20 to document your results. Unless you are recording actual release detection results at least every 14 days and maintaining records for at least one year, you are not doing leak detection right.<br>UPDATED ☐ **Keep results for your annual release detection system operation tests for at least three years.**<br>☐ Keep all records of calibration, maintenance, and repair of your release detection equipment for at least one year.<br>☐ Keep all performance claims supplied by the installer, vendor, or manufacturer for at least five years. These records include the certification of your leak detection equipment described above.<br>UPDATED ☐ **Keep your periodic walkthrough inspection records for at least one year.**<br>UPDATED ☐ **If you store regulated substances containing greater than 10 percent ethanol or greater than 20 percent biodiesel or a hazardous substance, keep records demonstrating compatibility for as long as the UST system stores the regulated substance. Prior to storage of the above substances you must submit a UST-20, Alternative Fuel/Hazardous Substance Compatibility Checklist, for approval.** |

| Manual Tank Gauging<br>(for tanks 1,000 gallons or less installed prior to 11/1/2007 only) | |
|---|---|
| **Description** | *Manual tank gauging involves taking your tank out of service for the testing period (at least 36 hours) each week, during which the contents of the tank are measured twice at the beginning and twice at the end of the test period. The measurements are then compared to weekly and monthly standards to determine if the tank is tight.*<br>*This method may be used only for tanks of 1,000 gallons or less capacity meeting certain requirements. These requirements (tank size and test time) are found in the "Manual Tank Gauging for Small Underground Storage Tanks" publication and on the UST-16 "Manual Tank Gauging Record" form, both available via the internet at www.wastenotnc.org or by calling the UST Section Central Office at (919) 707-8171.* |
| **Perform These O&M Actions** | ☐ Once a week, record two inventory readings at the beginning of the test, allow the tank to sit undisturbed for the time specified on the UST-16 "Manual Tank Gauging Record" form, and record two inventory readings at the end of the test. (All UST forms may be obtained via the internet at www.wastenotnc.org or by calling 919-707-8171)<br>☐ Reconcile the numbers weekly and record them on a UST-16 "Manual Tank Gauging Record" form. (All UST forms may be obtained via the internet at www.wastenotnc.org or by calling 919-707-8171)<br>☐ If your tank ever fails the weekly standard or otherwise indicates a release, see Chapter 4: Known or Suspected Releases of this booklet for information on what to do next.<br>☐ At the end of 4 weeks, reconcile your records for the monthly standard and record the result on a UST-16 "Manual Tank Gauging Record" form. (All UST forms may be obtained via the internet at www.wastenotnc.org or by calling 919-707-8171)<br>☐ If your tank ever fails the monthly standard or otherwise indicates a release, see Chapter 4: Known or Suspected Releases of this booklet for information on what to do next.<br>☐ Ensure that your measuring stick can measure to the nearest one-eighth inch and can measure the level of product over the full range of the tank's height. You should check your measuring stick periodically to make sure that you can read the markings and numbers and that the bottom of the stick is not worn.<br>☐ **No later than October 13, 2018, you must begin performing periodic walkthrough inspections. These inspections include checking your tank gauging stick for operability and serviceability. See Chapter 7: Walkthrough Inspections for more information about these required walkthrough inspections. Use the UST-27, "Monthly Walkthrough Inspections, form to document.**<br>☐ Make sure employees who run, monitor, or maintain the release detection system know exactly what they have to do and to whom to report problems. UST owners must have a trained primary operator for each UST facility. |
| **Keep These O&M Records** | ☐ Keep your 30-day manual tank gauging release detection records for at least one year. Unless you are recording actual release detection results weekly and at least every 30 days and maintaining records for at least one year, you are not doing leak detection right.<br>☐ **Keep your periodic walkthrough inspection records for at least one year.** |

UPDATED

UPDATED

# UST-16 MANUAL TANK GAUGING RECORD

Month _____ Year _____

Tank Identification _____

Person Completing Form _____

Facility Name _____

Circle your tank size, test duration, and weekly/monthly standards in the table below:

| Tank Size | Minimum Duration Of Test | Weekly Standard (1 test) | Monthly Standard (4-test average) |
|---|---|---|---|
| up to 550 gallons | 36 hours | 10 gallons | 5 gallons |
| 551-1,000 gallons (when tank diameter is 64”) | 44 hours | 9 gallons | 4 gallons |
| 551-1,000 gallons (when tank diameter is 48”) | 58 hours | 12 gallons | 6 gallons |

Compare your weekly readings and the monthly average of the 4 weekly readings with the standards shown in the table on the left.

If the calculated change exceeds the weekly standard, the UST may be leaking. Also, the monthly average of the 4 weekly test results must be compared to the monthly standard in the same way.

If either the weekly or monthly standards have been exceeded, the UST may be leaking. As soon as possible, call your NCDEQ regional office UST section to report the suspected leak and get further instructions.

| Start Test (month, day, and time) | First Initial Stick Reading | Second Initial Stick Reading | Average Initial Reading | Initial Gallons (convert inches to gallons) [a] | End Test (month, day, and time) | First End Stick Reading | Second End Stick Reading | Average End Reading | End Gallons (convert inches to gallons) [b] | Change In Tank Volume In Gallons + or (—) [b—a] | Tank Passes Test (circle YES or NO) |
|---|---|---|---|---|---|---|---|---|---|---|---|
| Date: Time: AM/PM | | | | | Date: Time: AM/PM | | | | | | Y N |
| Date: Time: AM/PM | | | | | Date: Time: AM/PM | | | | | | Y N |
| Date: Time: AM/PM | | | | | Date: Time: AM/PM | | | | | | Y N |
| Date: Time: AM/PM | | | | | Date: Time: AM/PM | | | | | | Y N |
| | | | | | | | | To see how close you are to the monthly standard, divide the sum of the 4 weekly readings by 4 and enter result here > | | | Y N |

**KEEP THIS PIECE OF PAPER ON FILE FOR AT LEAST 1 YEAR**

UST-16 Revised 5/2018

**Figure 2 - UST-16 MTG Record**

| **Automatic Line Leak Detection** (for pressurized piping only) | |
|---|---|
| **Description** | *Automatic line leak detectors (LLDs) are designed to detect a catastrophic release from pressurized piping. Automatic LLDs must be designed to detect a leak at least as small as 3 gallons per hour at a line pressure of 10 psi within 1 hour. When a leak is detected, automatic LLDs must shut off the product flow, restrict the product flow, or trigger an audible or visual alarm. Typical automatic LLDs include both mechanical (MLLDs) and electronic line leak detectors (ELLDs). NOTE: Automatic LLDs that restrict flow need to be installed and operated as close as possible to the tank (LLDs are designed to detect a leak and restrict flow only between the detector and the dispenser).* |
| **Performance Claims** | ☐ Make sure release detection equipment and any probes are certified for the types of piping, and contents stored on which the release detection system is used. Manufacturers are required to have their leak detection devices tested and certified by a third party to verify that their equipment meets specific performance requirements set by regulatory agencies. If you don't have a third-party certification (sometimes called a certified performance claim), have the manufacturer provide it to you. |
| **Perform These O&M Actions** | ☐ Test your automatic LLDs annually according to the manufacturer's instructions to make sure they are working properly. Don't assume that your release detection system is working and never needs checking. LLDs are required by law to be tested annually.<br>☐ **No later than October 13, 2018, you must begin inspecting and testing your release detection system, including electronic ALLDs, every year. You must test your ALLDs (Mechanical and Electronic versions) by simulating a leak, which evaluates the ALLDs' ability to detect a leak. Use the UST-22B, "Annual Leak Detection Equipment Operability Check", form or the testing companies form to document.**<br>☐ If your LLD indicates a release (e.g., by restricting flow, shutting off flow or by sounding an alarm), see Chapter 4: Known or Suspected Releases of this booklet for information on what to do next.<br>☐ Make sure employees who run, monitor, or maintain the release detection system know exactly what they have to do and to whom they need to report problems. UST owners must have a trained primary operator for each UST facility. |
| **Keep These O&M Records** | ☐ **Keep results for your annual release detection system operation tests for at least three years.**<br>☐ If used for monthly monitoring, keep results of your release detection system tests for at least one year. Your monitoring equipment system may provide printouts that can be used as records. In addition to the ELLD leak test printouts you will need the printouts of the ELLD alarm history for the past year. If you are using an ELLD that does not produce printouts to be used as records, you may use a log sheet such as the one on page 22 to record the status of your piping. Unless you are recording actual release detection results at least every 30 days and maintaining records for at least one year, you are not doing leak detection right.<br>☐ Keep all records of calibration, maintenance, and repair of your release detection equipment for at least one year.<br>☐ Keep any schedules of required calibration and maintenance provided by the release detection equipment manufacturer for at least five years from the date of installation.<br>☐ Keep all performance claims supplied by the installer, vendor, or manufacturer for at least five years. These records include the certification of your leak detection equipment described above.<br>☐ **If you store regulated substances containing greater than 10 percent ethanol or greater than 20 percent biodiesel or a hazardous substance, keep records demonstrating compatibility for as long as the UST system stores the regulated substance. Prior to storage of the above substances you must submit a UST-20, "Alternative Fuel/Hazardous Substance Compatibility Checklist", for approval.** |

UPDATED

UPDATED

UPDATED

| Line Tightness Testing (for piping installed prior to 11/1/2007 only) | |
|---|---|
| **Description** | *This method uses a periodic line tightness test to determine if your piping is leaking. Tightness testing can be performed by either a trained professional or by using a permanently installed electronic system. Often times, an electronic system will consist of an Electronic Line Leak Detector (ELLD) and be connected to Automatic Tank Gauge (ATG) console so that the results of the leak tests can be recorded.* |
| **Performance Claims** | ☐ Make sure your line tightness testing or permanently installed electronic system is certified for the types of piping, and contents stored on which the release detection system is used. Manufacturers are required to have their line tightness test methods and release detection equipment tested and certified by a third party to verify that their services or equipment meet specific performance requirements set by regulatory agencies. If you don't have a third-party certification (sometimes called a certified performance claim), have the tightness tester or equipment manufacturer provide it to you. |
| **Perform These O&M Actions** | ☐ If you have pressurized piping and use line tightness testing, you must conduct the test at least annually.<br>☐ If you have suction piping and use line tightness testing, you must conduct the test at least every three years. “Safe suction” or “European” piping as described at the bottom of page 4 does not need release detection testing, unless the piping is located near a well used for human consumption or a protected surface water as described on page 10<br>☐ All tightness testing must be conducted by a professional trained in performing line tightness testing or by using a permanently installed electronic system.<br>☐ If your piping ever fails a line tightness test or if the electronic system indicates a release, see Chapter 4: Known or Suspected Releases of this booklet for information on what to do next.<br>☐ **No later than October 13, 2018, you must begin inspecting and testing your release detection system, including ALLDs, every year. You must test your ALLDs (Mechanical and Electronic version) by simulating a leak, which evaluates the ALLDs’ ability to detect a leak.**<br>☐ Make sure employees who run, monitor, or maintain the electronic system know exactly what they have to do and to whom they need to report problems. UST owners must have a trained primary operator for each UST facility. |
| **Keep These O&M Records** | ☐ Keep results of your most recent line tightness tests for at least one year for pressurized piping or three years for suction piping. If you are using an electronic system, such as an ELLD, your monitoring equipment may provide printouts that can be used as records. If you are using an electronic system that does not produce printouts to be used as records, you may use a log sheet such as the one on page 22 to record the status of your piping. Unless you are recording and maintaining actual release detection results (annually for pressurized piping or every three years for suction piping) you are not doing leak detection right.<br>☐ **If using an electronic line leak detector for tightness testing, keep results for your annual release detection system operation tests for at least three years. Use the UST-22B, “Annual Leak Detection Equipment Operability Check”, form or the testing companies form to document.**<br>☐ Keep all records of calibration, maintenance, and repair of your equipment for at least one year.<br>☐ Keep any schedules of required calibration and maintenance provided by the release detection equipment manufacturer for at least five years from the date of installation<br>☐ Keep all performance claims supplied by the installer, vendor, or manufacturer for at least five years. These records include the certification of the line tightness test used and/or your leak detection equipment described above.<br>☐ **If you store regulated substances containing greater than 10 percent ethanol or greater than 20 percent biodiesel or a hazardous substance, keep records demonstrating compatibility for as long as the UST system stores the regulated substance. Prior to storage of the above substances you must submit a UST-20, “Alternative Fuel/Hazardous Substance Compatibility Checklist”, for approval.** |

UPDATED

UPDATED

UPDATED

# Release Detection Monitoring Record

*This form may be used to document results of release detection methods (automatic tank gauging, interstitial monitoring, monitoring wells, ELLD, etc.) that do not already provide hardcopy results showing the presence or absence of a leak.*

*NOTE: Groundwater and vapor monitoring wells must be checked every 14 days.*

| Facility Name: | Facility ID #: |
|---|---|

| Street Address: |
|---|

| County: | City (Nearest): | Zip Code: |
|---|---|---|

| I. UST SYSTEM INFORMATION | UST System #1 | UST System #2 | UST System #3 | UST System #4 |
|---|---|---|---|---|
| 1. Tank/Piping ID (if one is used to differentiate between tanks, piping etc.) | | | | |
| 2. Tank Size (in gallons) | | | | |
| 3. Product Type (e.g., unleaded regular, premium, diesel, kerosene etc.) | | | | |
| 4. Method of Release Detection (e.g., automatic tank gauging, interstitial monitoring, ELLD, monitoring wells etc.) | | | | |
| 5. Indicate if release detection is being performed on Tank and/or Piping | Tank / Piping | Tank / Piping | Tank / Piping | Tank / Piping |

| II. UST SYSTEM RELEASE DETECTION RESULTS | | (Enter "N" for NO RELEASE DETECTED or "Y" for a SUSPECTED OR CONFIRMED RELEASE) | | | |
|---|---|---|---|---|---|
| **Date** | **Your Name** | **UST System #1** | **UST System #2** | **UST System #3** | **UST System #4** |
| | | | | | |
| | | | | | |
| | | | | | |
| | | | | | |
| | | | | | |
| | | | | | |
| | | | | | |
| | | | | | |
| | | | | | |
| | | | | | |
| | | | | | |
| | | | | | |

**KEEP THIS FORM AND ALL ASSOCIATED PRINTOUTS / RECORDS ON FILE FOR AT LEAST ONE YEAR FROM THE DATE OF THE LAST ENTRY**

**Figure 3 - Release Detection Record**

# Chapter 4: Known or Suspected Releases

You need to be fully prepared to respond to releases BEFORE they may occur. You need to know what to do when release detection methods indicate a suspected or confirmed release. Be ready to take the following steps, as appropriate.

## A. Stop the Release

- Take immediate action to prevent the release of more product.
- Use the emergency shutoff switch to stop the flow of product. (Make sure you know where your emergency shutoff switch is located.)
- Turn off the power to the dispenser and "bag" the nozzle.
- Identify any fire, explosion, or vapor hazards and take action to neutralize these hazards.
- Empty the tank, if necessary, to prevent further contamination of the site. You may need the assistance of your supplier or distributor.

## B. Call for Help

Contact your local fire or emergency response authority. Make sure you have these crucial telephone numbers prominently posted where you and your employees can easily see them.

## C. Contain the Spill or Overfill

Contain, absorb, and clean up any surface spills or overfills. You should keep enough absorbent material at your facility to contain a spill or overfill of petroleum products until emergency response personnel can respond to the incident. The suggested supplies include, but are not limited to, the following:

- Containment devices, such as containment booms, dikes, and pillows.
- Absorbent material, such as kitty litter, chopped corn cob, sand, and sawdust. (Be sure you properly dispose of used absorbent materials.)
- Mats or other material capable of keeping spills or overfills out of nearby storm drains.
- Spark-free flash light.
- Spark-free shovel.
- Buckets.
- Reels of "caution tape", traffic cones, and warning signs.

**Page 26 is a blank form to list names and phone numbers of important contacts. Fill out this information for your facility so that you will know who to call in case of an emergency. Print this page from the booklet, fill it out, and post it in a prominent place at your facility.**

**Print multiple copies of page 26 and update it often. Make sure everyone at your UST facility is familiar with this list of contacts.**

## D. Report to Authorities and Investigate

**Suspected Releases**

If you observe any of the following indications of a suspected release, submit a UST-17A "UST Suspected Release 24-Hour Notice" to the UST Section Central Office as soon as possible (within 24 hours):

- Any spill or overfill of petroleum that exceeds 25 gallons or causes a sheen on nearby surface water. Spills and overfills under 25 gallons that are contained and immediately cleaned up do not have to be reported. If they cannot be quickly cleaned up, you must report them to NC DEQ.
- Any released regulated substances at the UST site or in the surrounding area — such as the presence of liquid petroleum; soil contamination; surface water or groundwater contamination; or petroleum vapors in sewer, basement, or utility lines.
- Any unusual operating conditions you observe — such as erratic behavior of the dispenser, a sudden loss of product, or an unexplained presence of water in the tank. However, you are not required to report if:
    - The system equipment is found to be defective, but not have a release, and is immediately repaired or replaced.
    - For secondarily-contained systems, any liquid in the interstitial space not used as part of the interstitial monitoring method is immediately removed (for example, fuel in the interstitial space of a monitoring system intended to be operated with brine).
- Results from your release detection system, including investigation of an alarm, indicate a suspected release. However, you are not required to report if:
    - The monitoring device is found to be defective and is immediately repaired, recalibrated, or replaced and further monitoring does not confirm the initial suspected release, or
    - The alarm was investigated and determined to be a non-release event; for example, from a power surge or caused by filling the tank during release detection testing.

Suspected releases must be investigated by performing a system check consisting of a tank tightness test and/or line tightness test to determine whether a leak exists in that portion of the tank that routinely contains product, or the attached delivery piping, or both.

- You must repair or replace the UST system, and begin corrective action if the tightness test results for the tank and/or piping indicate that a leak exists.
- Further investigation is not required if the test results for the tank and piping do not indicate that a leak exists and if environmental contamination is not the basis for suspecting the release.

Within seven days of observing indications of a suspected release, submit a UST-17B "UST Suspected Release 7-Day Notice" to the UST Section Central Office documenting the results of your investigation.

**Confirmed Releases**

If you observe any of the following indications of a confirmed release, contact your regional UST office and submit an UST-61 “24-Hour Release and UST Leak Reporting Form” as soon as possible (within 24 hours):

- Any spill or overfill of petroleum that exceeds 25 gallons or that causes a sheen on nearby surface water. Spills and overfills under 25 gallons that are contained and immediately cleaned up do not have to be reported. If they can’t be cleaned up within 24 hours they must be reported to your regional UST office.
- Any released regulated substances at the UST site or in the surrounding area — such as the presence of liquid petroleum; soil contamination; surface water or groundwater contamination; or petroleum vapors in sewer, basement, or utility lines.

Confirmed releases require a site check to be conducted. Site checks measure for the presence of a release where contamination is most likely to be present at the UST site. If the test results indicate that a release has occurred, you must begin corrective action. If the test results do not indicate that a release has occurred, further investigation is not required. Procedures for a site check are contained in the most recent version of the UST Section’s “Guidelines for Site Checks, Tank Closure, and Initial Response and Abatement”.

The next page contains a blank list for names and phone numbers of important contacts.

Fill out this information for your facility so that you will know who to call in case of an emergency. Remove this page from the manual, copy it, fill it out, post it in a prominent place at your facility and make sure everyone at your UST facility is familiar with the list of contacts.

## Figure 4 - Release Response Contact Form

# Release Response
## Important Contact Information

| | Contact Name | Phone # |
|---|---|---|
| **UST Regional Office:** | | |
| **Fire Department:** | | |
| **Ambulance:** | | |
| **Police Department:** | | |
| **County Fire Marshal:** | | |
| **Repair Contractor:** | | |
| **Other Contacts:** | | |

**NCDEQ UST Central Office**
**1646 Mail Service Center, Raleigh, NC 27699-1646**
**Phone: (919) 707-8171 Fax: (919) 715-1117**

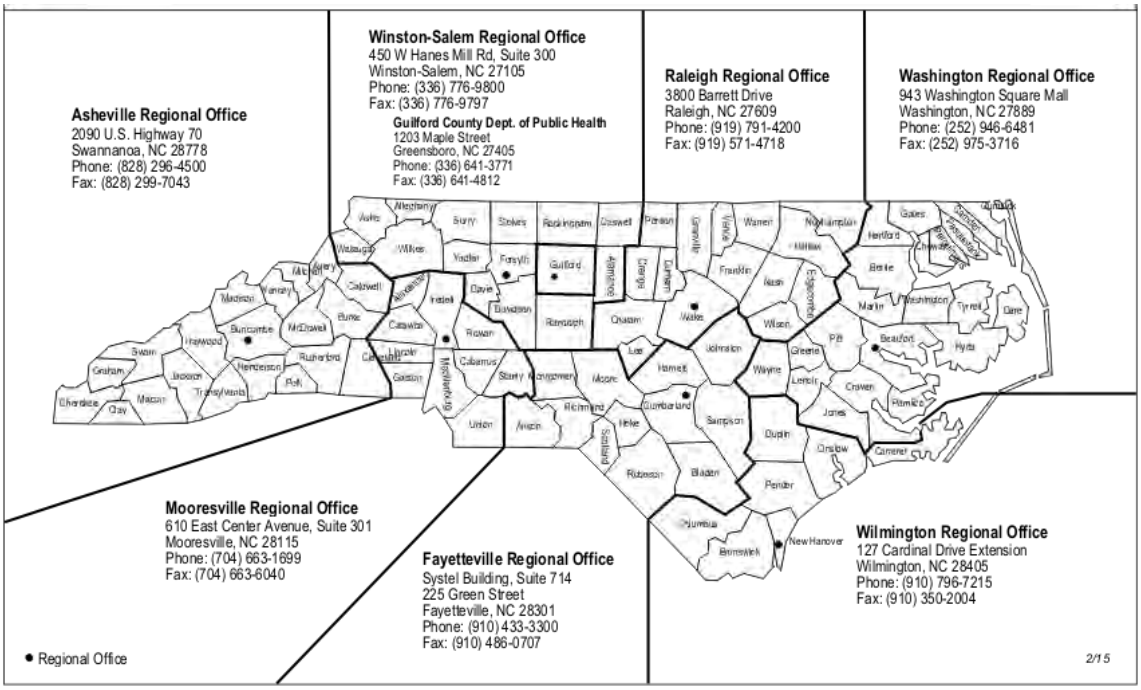


# Release Response Checklist

- ❑ **Stop the release:** Take immediate action to prevent the release of more product. Turn off the power to the dispenser and “bag” the nozzle. Make sure you know where your emergency shutoff switch is located. Empty the tank, if necessary, to prevent further contamination of the site
- ❑ **Contain the spill or overfill:** Contain, absorb, and clean up any surface releases. Identify any fire, explosion or vapor hazards and take action to neutralize these hazards.
- ❑ **Call for help and to report suspected or confirmed releases:** Contact your local fire or emergency response authority. Contact your regional UST office within 24 hours.

# Chapter 5: Spill and Overfill Prevention

## A. Introduction

The purpose of spill and overfill prevention equipment is to reduce the potential for a release during fuel deliveries. The equipment must be in working order and used properly to provide adequate protection from spills and overfills.

Even the best spill and overfill prevention equipment can become faulty over time if not properly operated and maintained. Small fuel leaks from a poorly maintained spill bucket can result in large amounts of contaminated soil over time. And improperly operating overfill prevention equipment can result in tank overfills.

Only one gallon of fuel leaking each week from a poorly maintained spill bucket can result in up to 195 tons of contaminated soil in a year.

UPDATED

**The 2015 federal UST regulation, as adopted by NC DEQ on June 1, 2017, requires operability testing of spill buckets (document on a UST-23A, "Triennial UST Spill Bucket Integrity Testing", form) and inspections of overfill prevention equipment (document on a UST-22A, "Overfill Prevention Equipment Operability Check", form) once every three years. The test must be conducted according to a code of practice, manufacturer's instructions, or requirements developed by the implementing agency. In addition, it requires walkthrough inspections (document on a UST-27, "Monthly Walkthrough Insepction", form) that look at spill equipment at least every 30 days. Records of walkthrough inspections must be kept and must include a list of each area checked, whether each area checked was acceptable or needed action, and a description of actions taken to correct an issue. If owners and operators receive deliveries less frequently than every 30 days, spill prevention equipment may be checked prior to each delivery. Delivery records must be maintained if spill prevention equipment is checked less frequently than every 30 days.**

UPDATED

**If you repair your spill (approved liners are allowed) or overfill prevention equipment, you must test or inspect, as appropriate, the equipment within 30 days after the repair.**

The following pages in this chapter focus on how you can routinely make sure your spill and overfill equipment is operating effectively.

**What Is the Difference?**

***Spill Protection***
**A spill bucket is installed at the fill pipe to contain the drips and spills of fuel that can occur when the delivery hose is uncoupled from the fill pipe after delivery.**

***Overfill Protection***
**Equipment is installed on the UST and designed to stop product flow, reduce product flow, or alert the delivery person during delivery that the tank is nearing full capacity. This allows the person filling the tank to stop product delivery before the tank becomes full and begins releasing product into the environment.**

## B. What Are the Basics of Spill Prevention?

Your USTs must have spill buckets — also called spill catchment basins — installed at the fill pipe to contain spills that may occur as a result of fuel deliveries.

- The spill bucket is designed to temporarily contain product spills that might occur during fuel delivery. To contain a spill, the spill bucket must be liquid tight.
- The spill bucket is not designed to contain fuel for long periods of time and must be quickly emptied and the contents disposed of properly.
- Spill buckets need to be large enough to contain any fuel that may spill when the delivery hose is uncoupled from the fill pipe. Spill buckets typically range in size from 5 gallons to 25 gallons.
- If you use a checklist for correct filling practices (see page 35), spills should be eliminated or reduced to very small volumes that your spill bucket can easily handle.

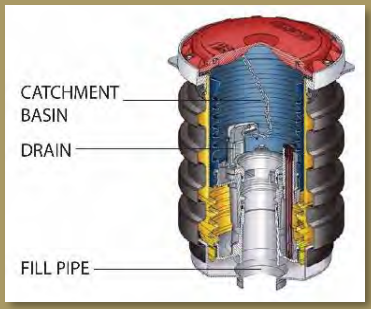


*Spill bucket*

*Your equipment supplier can help you choose the size and type of spill bucket that meets your needs.*

*If your UST only receives deliveries of 25 gallons or less at a time, the UST does not need to meet the spill and overfill protection requirements. Many used oil tanks fall into this category. Even though these USTs are not required to have spill and overfill protection, you should consider using spill and overfill protection as part of good UST system management.*

## C. Checklist for Spill Buckets

The checklist below provides information on properly maintaining your spill bucket.

| | Spill Buckets | |
|---|---|---|
| | **Description** | Spill buckets are basins installed at the fill pipe to temporarily contain product spills that may occur during fuel delivery. |
| UPDATED<br>UPDATED | **Perform These O&M Actions** | ☐ **No later than October 13, 2018, you must conduct your first 30 day walkthrough inspection (UST-27). Note that if you receive deliveries less frequently than every 30 days, you may check your spill bucket before each delivery.**<br>o **Visually check for any damage to the spill bucket.**<br>o **Remove any liquid or debris from the spill bucket.**<br>o **Check for and remove any obstructions, such as tank gauging sticks, in the fill pipe.**<br>o **Make sure your fill cap is securely fastened.**<br>o **If you have a double-walled spill bucket with interstitial monitoring, check your interstitial monitoring device for a leak into the interstitial area.**<br>☐ **Spill buckets installed <u>prior to 11/1/2007</u>: No later than October 13, 2018, you must conduct the first 3-year test of your spill bucket (UST-23A). This test should be conducted by a person qualified to conduct spill bucket testing. If you use a double-walled spill bucket and check the interstitial space of your spill bucket monthly for leaks and keep a record of the leak check, then this testing is not required.**<br>☐ Spill buckets installed **<u>on or after 11/1/2007</u>**: The spill bucket must be double-walled and monitored interstitially. If the bucket is monitored by a float sensor then you must conduct a tightness test (UST-23A) of your spill bucket every 3 years. If the bucket is monitored monthly by pressure, vacuum, or hydrostatic methods then the 3-year tightness test is not required. |
| UPDATED<br>UPDATED<br>UPDATED | **Keep These O&M Records** | ☐ **Spill buckets installed <u>prior to 11/1/2007</u>: Keep records of your spill bucket testing for three years or keep documentation showing the spill bucket is double-walled and the integrity of both walls is periodically monitored for as long as spill bucket testing is not performed.**<br>☐ Spill buckets installed **<u>on or after 11/1/2007</u>**: Keep records of your spill bucket testing for three years if the double walled bucket is monitored by a float sensor. If the bucket is monitored monthly by pressure, vacuum, or hydrostatic methods then keep at least 12 months of monthly interstice monitoring records.<br>☐ **Keep records of your periodic walkthrough inspections for one year.**<br>☐ **Keep delivery records for one year if you conduct walkthrough inspections of your spill bucket less frequently than every 30 days.**<br>☐ **If you store regulated substances containing greater than 10 percent ethanol or greater than 20 percent biodiesel or a hazardous substance, keep records demonstrating compatibility for as long as the UST system stores the regulated substance. Prior to storage of the above substances you must submit a UST-20, "Alternative Fuel/Hazardous Substance Compatibility Checklist", for approval.** |

**Table 2 - Spill Bucket O & M Checklist**

## D. What are the Basics of Overfill Prevention?

Your USTs must have overfill prevention installed to help prevent the overfilling of tanks.

Three types of overfill prevention devices are commonly used:

- Automatic Shutoff Devices (e.g. Flapper Valves)
- Overfill Alarms (at the UST fill port)
- Ball Float Valves, also referred to as flow restrictors or float vent valves.

If your UST ***never*** receives deliveries of more than 25 gallons at a time, the UST does not need to meet the spill and overfill prevention requirements. Many used oil tanks fall into this category. Even though these USTs are not required to have spill and overfill prevention, you should consider using them as part of good UST system management.

Each of these forms of overfill prevention is discussed in detail on the following pages.

UPDATED

**Note that ball float valves may not be installed or replaced for use as overfill protection after June 1, 2017.**

## E. How Can You Help the Delivery Person Avoid Overfills?

To protect your business, you must make every effort to help the delivery person avoid overfilling your UST.

- Use correct filling practices. If correct filling practices are used, you will not exceed the UST's capacity — see page 35 for a checklist of correct filling practices. Overfills can result when the delivery person makes a mistake, such as ignoring an overfill alarm.
- Use signs; alert your delivery person. The delivery person should know what type of overfill device is present on each tank at your facility and what action will occur if the overfill device is triggered — such as a visual or audible alarm or that the product flow into the tank will stop or slow significantly. Educate and alert your delivery person by placing a sign near your fill pipes, in plain view of the delivery person. See the example below.

**Delivery Person – Avoid Overfills**

- An overfill alarm is used for overfill protection at this facility.
- Do not tamper with this alarm or attempt to defeat its purpose.
- When the tank is 90% full, the overfill alarm whistles and a red light flashes.
- If you hear the alarm whistle or see the red light flashing, **stop the delivery immediately.**

- Make sure you order the right amount of product. Order only the quantity of fuel that will fit into 90 percent of the tank. For example, if you have a 10,000 gallon tank with 2,000 gallons already in the tank, you would order at most a 7,000 gallon delivery (90 percent of 10,000 is 9,000 gallons; subtracting the 2,000 gallons already in the tank leaves a maximum delivery of 7,000 gallons). Use the formula on page 35. Calculate carefully and reduce the chance of overfills.

## F. What Should You Do to Operate and Maintain Your Automatic Shutoff Device?

The automatic shutoff device is a mechanical device installed in line with the drop tube within the fill pipe riser. It slows down and then stops the delivery when the product has reached a certain level in the tank. It should be positioned so that the float arm is not obstructed and can move through its full range of motion.

When installed and maintained properly, the shutoff valve will shut off the flow of fuel to the UST at 95% of the tank's capacity or before the fittings at the top of the tank are exposed to fuel.

The checklist below provides information on properly maintaining your automatic shutoff device.

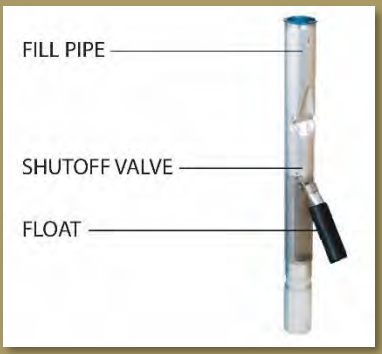


*Automatic shutoff device*

*You should not use an automatic shutoff device for overfill protection if your UST receives pressurized deliveries.*

| Automatic Shutoff Devices | |
|---|---|
| **Description** | Automatic shutoff devices are mechanical devices installed in the fill pipe riser to slow down and stop delivery when product reaches a certain level in the tank. |
| UPDATED<br>**Perform These O&M Actions** | ☐ **No later than October 13, 2018, you must conduct the first 3-year inspection of your overfill device (UST-22A). This inspection should be conducted by a person qualified to conduct overfill inspections. The purpose of the inspection is to make sure the automatic shutoff device is functioning properly and the device will shut off fuel flowing into the tank at 95 percent of the tank capacity or before the fittings at the top of the tank are exposed to fuel.**<br>o **Make sure the float operates properly.**<br>o **Make sure there are no obstructions in the fill pipe that would keep the floating mechanism from working.**<br>☐ You should post signs that the delivery person can easily see and that alert the delivery person to the overfill warning devices and alarms in use at your facility. |
| UPDATED<br>UPDATED<br>**Keep These O&M Records** | ☐ **You must maintain all records of the inspection for three years.**<br>☐ **If you store regulated substances containing greater than 10 percent ethanol or greater than 20 percent biodiesel or a hazardous substance, keep records demonstrating compatibility for as long as the UST system stores the regulated substance. Prior to storage of the above substances you must submit a UST-20, "Alternative Fuel/Hazardous Substance Compatibility Checklist", for approval.** |

**Table 3 - Auto Shutoff Device O & M Checklist**

## G. What Should You Do to Operate and Maintain Your Electronic Overfill Alarm?

This type of overfill device activates an audible and/or visual warning to delivery personnel when the tank is either 90% full or is within one minute of being overfilled. **The alarm must be located so that it can be seen and/or heard from the UST delivery location.** Once the electronic overfill alarm sounds, the delivery person has approximately one minute to stop the flow of fuel to the tank.

Electronic overfill alarm devices have no mechanism to shut off or restrict flow. Therefore, the fuel remaining in the delivery hose after the delivery has been stopped will flow into the tank as long as the tank is not yet full.

The checklist below provides information on properly maintaining your automatic shutoff device.

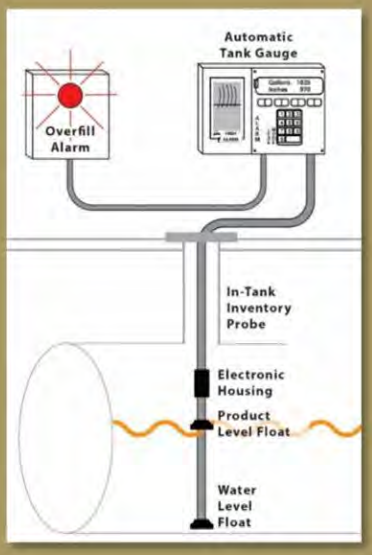


*Overfill alarm*

| Overfill Alarms | |
|---|---|
| **Description** | Overfill alarms activate an audible or visual warning to delivery personnel when the tank is either 90 percent full or is within one minute of being overfilled. Electronic overfill alarm devices have no mechanism to shut off or restrict flow. |
| UPDATED **Perform These O&M Actions** | ☐ **No later than October 13, 2018, you must conduct the first 3-year inspection of your overfill device (UST-22A). This inspection should be conducted by a person qualified to conduct overfill inspections. The purpose of the inspection is to make sure the electronic overfill alarm is functioning properly and the alarm activates when the fuel reaches 90 percent of the tank capacity or is within one minute of being overfilled.**<br>o **Ensure that the alarm can be heard or seen from where the tank is fueled.**<br>o **Make sure that the electronic device and probe are operating properly.**<br>☐ You should post signs that the delivery person can easily see and that alert the delivery person to the overfill warning devices and alarms in use at your facility. |
| UPDATED<br>UPDATED **Keep These O&M Records** | ☐ **You must maintain records of the inspection for three years.**<br>☐ **If you store regulated substances containing greater than 10 percent ethanol or greater than 20 percent biodiesel or a hazardous substance, keep records demonstrating compatibility for as long as the UST system stores the regulated substance. Prior to storage of the above substances you must submit a UST-20, "Alternative Fuel/Hazardous Substance Compatibility Checklist", for approval.** |

**Table 4 - O & M Checklist for Overfill Alarms**

## H. What Should You Do to Operate and Maintain Your Ball Float Valve?

UPDATED

**Ball float valves cannot be installed or replaced for use as overfill protection after June 1, 2017. However, you may continue using ball float valves already installed as long as they operate properly.**

The ball float valve — also called a float vent valve — is installed at the vent pipe in the tank and restricts vapor flow out of an UST as the tank gets close to being full. The ball float valve should be set at a depth which will restrict vapor flow out of the vent line during delivery at 90% of the UST's capacity or 30 minutes prior to overfilling.

As the tank fills, the ball in the valve rises, restricting the flow of vapors out of the UST during delivery. The flow rate of the delivery will decrease noticeably and should alert the delivery person to stop the delivery.

For ball float valves to work properly, the top of the tank must be air tight so that vapors cannot escape from the tank. Everything from fittings to drain mechanisms on spill buckets must be tight and be able to hold the pressure created when the ball float valve engages.

The checklist below provides information on properly maintaining your ball float valves.

*Ball float valve*

*You should not use a ball float value for overfill protection if your UST receives pressured deliveries or if your UST system has suction piping or single point (coaxial) stage 1 vapor recovery.*

| Ball Float Valves | |
|---|---|
| **Description** | Ball float valves are a type of overfill protection device that function by restricting vapor flow in an UST as the tank gets close to being full. |
| UPDATED<br>**Perform These O&M Actions** | ☐ **No later than October 13, 2018, you must conduct the first 3 year inspection of your overfill device (UST-22A). This inspection should be conducted by a person qualified to conduct overfill inspections. The purpose of the inspection is to make sure the ball float valve is functioning properly and will restrict fuel flowing into the tank at 90 percent of the tank capacity or 30 minutes prior to overfilling.**<br>o **Ensure the air hole is not plugged.**<br>o **Make sure the ball cage is still intact.**<br>o **Ensure the ball still moves freely in the cage.**<br>o **Make sure the ball still seals tightly on the pipe.**<br>☐ You should post signs that the delivery person can easily see and that alert the delivery person to the overfill warning devices and alarms in use at your facility. |
| UPDATED<br>UPDATED<br>**Keep These O&M Records** | ☐ **You must maintain records of the inspection for three years.**<br>☐ **If you store regulated substances containing greater than 10 percent ethanol or greater than 20 percent biodiesel or a hazardous substance, keep records demonstrating compatibility for as long as the UST system stores the regulated substance. Prior to storage of the above substances you must submit a UST-20, "Alternative Fuel/Hazardous Substance Compatibility Checklist", for approval.** |

**Table 5 - O & M Checklist for Ball Float Valves**

## I. What are Your Responsibilities for Correct Filling Practices?

As an owner or operator, you are responsible for ensuring that releases due to spilling or overfilling do not occur during fuel delivery. As part of this responsibility, you must:

- Ensure that the amount of product to be delivered will fit into the available empty space in the tank; and
- Ensure that the transfer operation is monitored constantly to prevent overfilling and spilling.

**Use a Checklist on Correct Filling Practices**

If correct filling practices are used, you will not exceed the UST's capacity — see the following page for a checklist on correct filling procedures.

**Use Signs, Alert Your Delivery Person**

Overfills are caused when the delivery person makes a mistake, such as ignoring an overfill alarm. The delivery person should know what type of overfill device is present on each tank at your facility and what action will occur if the overfill device is triggered — such as a visual and/or audible alarm or that the product flow into the tank will stop or slow significantly.

***Educate and alert your delivery person by placing a clear sign near your fill pipes, in plain view of the delivery person.*** An example of such a sign for an overfill alarm system is below.

**DELIVERY PERSON AVOID OVERFILLS**

- An **overfill alarm** is used for overfill prevention at this facility.
- Do not tamper with this alarm in any attempt to defeat its purpose.
- When the tank is 90% full, the overfill alarm whistles and a red-light flashes.
- **If you hear the alarm whistle or see the red-light flashing,**

**STOP THE DELIVERY IMMEDIATELY!**

**Figure 5 - Overfill Prevention Sign**

**Make Sure You Order the Right Amount**

Also, you need to **make sure you've ordered the right amount of product for delivery**. Order only the quantity of fuel that will fit into 90% of the tank. For example, if you have a 10,000 gallon tank with 2,000 gallons already in the tank, you would order at the most a 7,000 gallon delivery. Do your homework right and you reduce the chance of overfills.

**Remember: Your tank should never be more than 90-95% full.**

| Correct UST Filling Practices Checklist | |
|---|---|
| **What To Do Before Your USTs Are Filled** | ☐ Post clear signs that alert the delivery person to the overfill devices and alarms in use at your facility.<br>☐ Make and record accurate readings for product and water in the tank before fuel delivery.<br>☐ Order only the quantity of fuel that will fit into 90 percent of the tank.<br>☐ Remember, the formula for determining the maximum amount of gasoline to order is:<br>(Tank capacity in gallons X 90%) – Product currently in tank = Maximum amount of fuel to order<br>o Example: (10,000 gal X 0.9) – 2,000 gal = 7,000 gal maximum amount to order<br>☐ Ensure the delivery person knows the type of overfill device present at the tank and what actions to perform if it activates.<br>☐ Review and understand the spill response procedures.<br>☐ Verify that your spill bucket is empty, clean, and will contain spills. |
| **What To Do While Your USTs Are Being Filled** | ☐ Keep fill ports locked until the delivery person requests access.<br>☐ Keep an accurate tank capacity chart available for the delivery person.<br>☐ The delivery person makes all hook-ups.<br>☐ The person responsible for monitoring the delivery should remain attentive and observe the entire fuel delivery; be prepared to stop the flow of fuel from the truck to the UST at any time; and respond to any unusual condition, leak, or spill that may occur during delivery.<br>☐ Keep response supplies readily available for use in case a spill or overfill occurs; see Chapter 4: Known or Suspected .<br>☐ Provide safety barriers around the fueling zone.<br>☐ Make sure there is adequate lighting around the fueling zone. |
| **What To Do After Your USTs Are Filled** | ☐ Following complete delivery, the delivery person is responsible for disconnecting all hook-ups.<br>☐ Return spill response kit and safety barriers to proper storage locations.<br>☐ Make and record accurate readings for product and water in the tank after fuel delivery.*<br>☐ Verify the amount of fuel received.<br>☐ Make sure fill ports are properly secured.<br>☐ Ensure the spill bucket is free of product and clean up any small spills. |

## Table 6 - Correct UST Filling Checklist

*Note: The presence of water in your tank is an unusual operating condition. You should remove the water as soon as possible because it can cause problems such as corrosion and degrading fuel quality.

# Chapter 6: Corrosion Protection

## A. Overview

Corrosion protection for UST systems is important because unprotected steel USTs and piping can and do corrode. This may allow the release of product into the environment.

To prevent these leaks, all parts of your UST system that are underground and routinely contain product need to be protected from corrosion. The UST system includes the tank, piping, and ancillary equipment, such as flexible connectors, fittings, and pumps.

One way to protect UST components from corrosion is to make them with nonmetallic, noncorrodible materials, such as USTs made of (or clad or jacketed with) fiberglass reinforced plastic (FRP) or other noncorrodible materials. Noncorrodible USTs like these do not require operation and maintenance for corrosion protection.

UST components made from metal that are not clad or jacketed with a noncorrodible material, and that routinely contain product and are in direct contact with the ground, must have corrosion protection provided by cathodic protection or (in some cases) lining the interior of the tank, as described on the next page. These options require proper operation and maintenance.

Cathodic protection using sacrificial anode systems – sacrificial anodes are buried and attached to UST components for corrosion protection by an anode attached to a tank. Anodes are pieces of metal that are more electrically active than steel, and thus they suffer the destructive effects of corrosion rather than the steel they are attached to.

Cathodic protection using impressed current systems – an impressed current system uses a rectifier to provide direct current through anodes to the tank or piping to achieve corrosion protection. The steel is protected because the current going to the steel overcomes the corrosion-causing current flowing away from it. The cathodic protection rectifier must always be on and operating to protect your UST system from corrosion.

**Corrosion results when bare metal and soil and moisture conditions combine to produce an underground electric current that destroys hard metal. Over time, unprotected USTs can corrode and leak.**

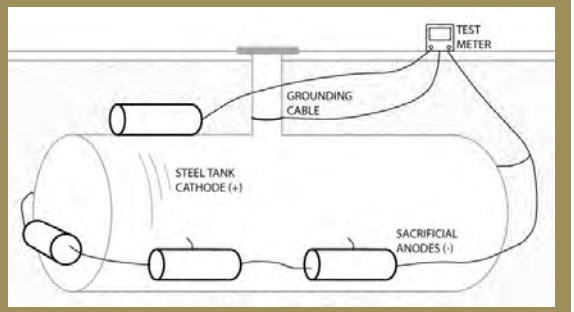


**Sacrificial anode system**

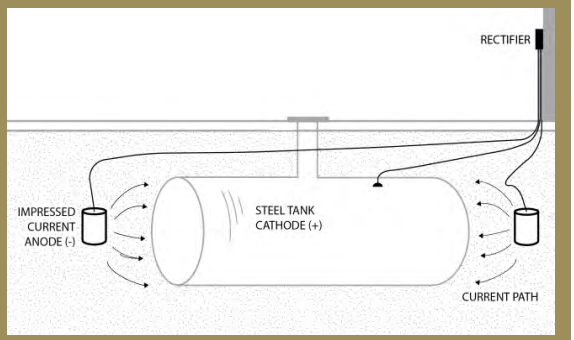


**Impressed current system**

Corrosion protection using internal lining of the tank **–** this corrosion protection option applies only to tanks installed before December 22, 1988. These older tanks were internally lined by trained professionals to meet the corrosion protection requirements. Note that internal lining may still be used in tanks for purposes other than corrosion protection.

UPDATED

In the 2015 federal UST regulation, EPA revised the internal lining requirement. **Owners and operators must permanently close tanks using internal lining as the sole method of corrosion protection, if the internal lining fails the periodic inspection and cannot be repaired according to a code of practice.**

NOTE: Metal tanks or piping installed after December 22, 1988 must have a dielectric coating (a coating that does not conduct electricity) in addition to the cathodic protection described in this chapter.

NOTE: In addition to tanks and piping, all other metal components in direct contact with the ground that routinely hold product; such as flexible connectors, swing joints, fittings, siphon bars and pumps; must also be cathodically protected.

*In addition to tanks and piping, all other metal components in direct contact with the ground that routinely hold product — such as flexible connectors, swing joints, fittings, and pumps — must also be protected from corrosion.*

The table below contains your corrosion protection options.

UPDATED

| Corrosion Protection Option | Description |
|---|---|
| Noncorrodible Material | The tank or piping is constructed of noncorrodible material. |
| Steel Tank Clad or Jacketed with A Noncorrodible Material | Examples of cladding or jacket material include fiberglass and urethane. Does not apply to piping. |
| Coated and Cathodically Protected Steel Tanks or Piping | Steel tank and piping are well coated with a dielectric material and cathodically protected. Cathodic protection may be provided by sacrificial anodes or impressed current. |
| Cathodically Protected Noncoated Steel Tanks or Piping | This option is only for steel tanks and piping installed before December 22, 1988. Cathodic protection is usually provided by an impressed current system. |
| Internal Lining of Tanks | In the 2015 federal UST regulation, EPA revised the internal lining requirement; **owners and operators must permanently close tanks using internal lining as the sole method of corrosion protection, if the internal lining fails the periodic inspection and cannot be repaired according to a code of practice.** This option only pertained to steel tanks installed before December 22, 1988. A lining is applied to the inside of the tank. Does not apply to piping. |
| Combination of Cathodically Protected Steel and Internal Lining of Tanks | This option is only for steel tanks installed before December 22, 1988. Cathodic protection is usually provided by an impressed current system. Does not apply to piping. |
| Other Methods Used to Achieve Corrosion Protection | If you have tanks or piping that do not meet any of the descriptions above, check with your implementing agency to see if your UST system meets the requirements for corrosion protection. You also will need to ask about the operation, maintenance, and recordkeeping requirements applicable to this type of UST system. |

**Table 7 - Corrosion Protection Choices**

## B. Operation and Maintenance Checklist and Record Keeping Forms

The operation and maintenance checklist on the following page can be used to help you determine whether you are operating and maintaining your corrosion protection correctly. Record keeping forms have also been provided for you to help with your documentation.

| O & M Checklist for Corrosion Protection (Sacrificial Anode) | |
|---|---|
| **Description** | Cathodic protection is one way to protect UST components from corrosion. Sacrificial anode systems have buried anodes attached to UST components; the anodes are more electrically active than steel, so they suffer the destructive effects of corrosion rather than the steel they are attached to. |
| **Perform These O&M Actions** | ☐ You need to have periodic tests conducted by a qualified corrosion tester to make sure your corrosion protection system is adequately protecting your UST system. These tests need to be conducted:<br>o Within 6 months of installation.<br>o At least every 3 years after the previous test.<br>o Within 6 months after any repairs to your UST system.<br>☐ Make sure that the professional tester is qualified to perform the test and follows a standard code of practice to determine that test criteria are adequate.<br>☐ If any test indicates that your tanks are not adequately protected, you must have a corrosion expert examine and fix your system.<br>☐ Testing more frequently can catch problems before they become big problems. |
| **Keep These O&M Records** | **You need to keep the results of at least the last two three-year tests on file.** The UST-7A form is used to record the results a corrosion tester observes when testing your sacrificial anode system. (All UST forms may be obtained via the internet at http://www.wastenotnc.org or by calling 919-707-8171) |

**Table 8 - O & M Checklist for Sacrificial Anode Corrosion Protection**

| O & M Checklist for Corrosion Protection (Impressed Current Systems) | |
|---|---|
| **Description** | Impressed current systems use a rectifier to provide direct current through anodes to the tank or piping to achieve corrosion protection. The steel is protected because the current going to the steel overcomes the corrosion-causing current flowing away from it. |
| **Perform These O&M Actions** | ☐ You need to have periodic tests conducted by a qualified corrosion tester to make sure your cathodic protection system is adequately protecting your UST system. These tests need to be conducted:<br>o Within 6 months of installation.<br>o At least every 3 years after the previous test.<br>o Within 6 months after any repairs to your UST system.<br>☐ Make sure that the professional tester is qualified to perform the test and follows a standard code of practice to determine that test criteria are adequate.<br>☐ If any test indicates that your tanks are not adequately protected, you need to have a corrosion expert examine and fix your system.<br>☐ Testing more frequently can catch problems before they become big problems.<br>☐ You need to inspect your rectifier at least every 60 days to make sure that it is operating within normal limits.<br>o This inspection involves reading and recording the voltage and amperage readouts on the rectifier. You or your employees can perform this periodic inspection.<br>o Make sure that your cathodic protection professional provides you with the rectifier's acceptable operating levels so that you can compare the readings you take with an acceptable operating level. If your readings are not within acceptable levels, you must contact a cathodic protection professional to address the problem<br>☐ You should have a trained professional periodically service your impressed current system.<br>☐ Never turn off your rectifier. If your rectifier is off, your UST system is not protected from corrosion. |
| **Keep These O&M Records** | ☐ You need to keep the results of at least the last two three-year tests on file. The UST-7B form is used to record the results a corrosion tester observes when testing your impressed current system. (All UST forms may be obtained via the internet at http://www.wastenotnc.org or by calling 919-707-8171)<br>☐ You need to keep records of at least the last 3 rectifier readings. See page 37 for a "60-Day Inspection Results" record keeping form. |

**Table 9 - O & M Checklist for Impressed Current Corrosion Protection**

UPDATED

| O & M Checklist for Corrosion Protection (Internally Lined Tanks) | |
|---|---|
| **Description** | Tanks installed before December 22, 1988, were internally lined by trained professionals to meet the corrosion protection requirements. |
| **Perform These O&M Actions** | ☐ Within 10 years after lining and at least every five years thereafter, the lined tank must be inspected by a trained professional and found to be structurally sound with the lining still performing according to original design specifications. Make sure the professional performing the inspection follows a standard code of practice.<br>☐ **You must permanently close tanks using internal lining as the sole method of corrosion protection, if the internal lining fails the periodic inspection and cannot be repaired according to a code of practice.** |
| **Keep These O&M Records** | ☐ Keep records of the inspection, as specified in industry standards for lining inspections. |

**Table 10 - O & M Checklist for Internally Lined Tanks**

# UST-21 IMPRESSED CURRENT CATHODIC PROTECTION SYSTEM 60-DAY RECORD OF RECTIFER OPERATION

- This form may be utilized to document that the cathodic protection system rectifier is checked for operation at least once every 60 days.
- Checked for operation is taken to mean that it was confirmed the rectifier was receiving power and is "turned-on".
- Any significant variance should be reported to your corrosion professional so that any repairs and/or adjustments necessary can be made.

| UST OWNER | | UST FACILITY | |
|---|---|---|---|
| Owner Name | | Facility Name | Facility ID#: |
| Street Address | | Street Address | |
| City | State | City | County |

**IMPRESSED CURRENT RECTIFIER DATA**

| | |
|---|---|
| Rectifier Manufacturer: | Rated DC Output: _____ VOLTS<br>_____ AMPS |
| Rectifier Model: | Rectifier Serial Number: |

What is the 'as designed' or lastly recommended rectifier output? _____ VOLTS _____ AMPS

**60-DAY LOG OF RECTIFIER OPERATION**

| DATE INSPECTED | RECTIFIER TURNED ON? | TAP SETTINGS | | DC OUTPUT | | HOUR METER | INSPECTOR INITIALS | COMMENTS |
|---|---|---|---|---|---|---|---|---|
| | | COARSE | FINE | VOLTS | AMPS | | | |
| | | | | | | | | |
| | | | | | | | | |
| | | | | | | | | |
| | | | | | | | | |
| | | | | | | | | |
| | | | | | | | | |
| | | | | | | | | |
| | | | | | | | | |
| | | | | | | | | |
| | | | | | | | | |
| | | | | | | | | |
| | | | | | | | | |
| | | | | | | | | |
| | | | | | | | | |

NORTH CAROLINA DEPARTMENT OF ENVIRONMENTAL QUALITY, DIVISION OF WASTE MANAGEMENT, UST SECTION
1646 MAIL SERVICE CENTER, RALEIGH, NC 27699-1646 PHONE (919) 707-8171 FAX (919) 715-1117 http://www.wastenotnc.org/web/wm 10/15

**Figure 6 - UST-21 Impressed Current 60 Day Record**

## *C.* What If You Combine Internal Lining and Cathodic Protection?

If you chose the combination of internal lining and cathodic protection for meeting corrosion protection requirements on your UST, you may not have to meet the periodic inspection requirement for the lined tank. However, you must always meet the requirements for checking and testing your cathodic protection system as described in the checklists on pages 38-39. The 10-year and subsequent five-year inspections of the lined tank are not required if the integrity of the tank was ensured when cathodic protection was added. You should be able to show an inspector documentation of the passed integrity assessment.

Example 1:
If cathodic protection and internal lining were applied to your tank at the same time, periodic inspections of the lined tank are not required because an integrity assessment of the tank is required prior to adding the cathodic protection and internal lining.

Example 2:
If cathodic protection was added to a tank in 1997 that was internally lined in 1994 and the contractor did not perform an integrity assessment of the tank at the time cathodic protection was added or you cannot show an inspector documentation of the passed integrity assessment, then periodic inspections of the lined tank are required. This is required because you cannot prove that the tank was structurally sound and free of corrosion holes when the cathodic protection was added. The lined tank needs to be periodically inspected because the lining may be the only barrier between your product and the surrounding environment.

# Chapter 7: Walkthrough Inspections

UPDATED

**No later than October 13, 2018, you must conduct your first walkthrough inspection (UST-27). Below we provide details and frequency of the inspection.**

**Every 30 days**

- **Check your spill prevention equipment for damage and remove liquid or debris.**
- **Check for and remove obstructions in the fill pipe.**
- **Check the fill cap to ensure it is securely on the fill pipe.**
- **For double-walled spill prevention equipment with interstitial monitoring, check for a leak in the interstitial area.**

**Exception: if your UST system receives deliveries at intervals greater than 30 days, you may check your spill prevention equipment prior to each delivery.**

- **Check your release detection equipment to ensure it is operating with no alarms or unusual operating conditions present (for example ATG consoles or pressure or vacuum gauges). You do not have to check release detection equipment in containment sumps. Release detection equipment in these areas is tested annually.**
- **Review your release detection records and ensure they are current.**

**Annually**

- **Check your sumps for damage and leaks to the sump area or releases to the environment (UST-22C).**
- **Remove liquid in contained sumps or debris.**
- **For double-walled containment sumps with interstitial monitoring, check for leaks in the interstitial area.**
- **Check your hand-held release detection equipment, such as groundwater bailers and tank gauge sticks, for operability and serviceability.**

**In addition, the 2015 federal UST regulation, as adopted by NC DEQ on June 1, 2017, allows owners and operators to conduct O&M walkthrough inspections according to a standard code of practice developed by a nationally recognized association or independent testing laboratory or according to requirements developed by NC DEQ. The inspections must check equipment in a manner comparable to the walkthrough inspection requirements described above. Note that owners and operators must use the entire code of practice if choosing this option for meeting the walkthrough inspection requirement.**

Inspecting a containment sump

In addition to the requirements listed above, you may also want to perform these good site management practices during your walkthrough inspections:

- Fill and monitoring ports: Are covers and caps tightly sealed and locked?
- Spill and overfill response supplies: Do you have the appropriate supplies for cleaning up a spill or overfill?
- Containment areas: Is there significant corrosion on the UST equipment in these areas? Corrosion could result in equipment in the containment area not working properly.
- Dispenser hoses, nozzles, and breakaways: Are they in good condition and working properly?

If you find problems during the inspection, you or your UST contractor must take action quickly to resolve these problems and avoid serious releases.

Use the UST-27, *Monthly Walkthrough Inspections*, form which can be found at http://www.wastenotnc.org or can be obtained by calling (919) 707-8171 to document the inspections.

# Chapter 8: Record Keeping and Compliance Checklist

## A. What Records Must You Keep?

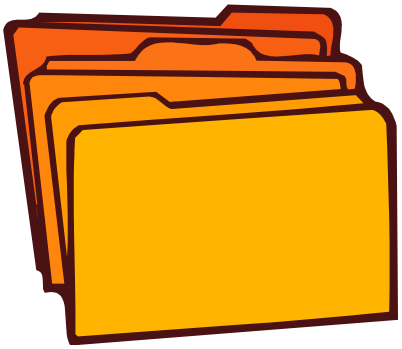

It is important to be organized and stay organized. A great deal of future problems can be prevented if you practice good organizational skills. Keep all of your UST records in one area so you can find them when you need them. Table 11 lists the major record keeping requirements for UST systems and Table 12 lists all the current NCDEQ UST forms and what they are used for.

## B. UST Record Keeping: The Basics

- Save all of your records. This includes receipts, invoices, warrantees, guarantees, pictures, videos, manuals or anything about your UST system.
- Keep all test results, performance claims, inspections, corrosion tests, repair records, closures and assessment reports and proof of financial responsibility.
- Keep your records on site or at a place easy to access in case you have to provide information to an inspector.
- In general, you should keep all of your records for as long as the tank system is in place.
- **Attention new tank owners:** If you purchase an existing system or become a new operator, make sure you get copies of all existing records.

## C. Where Should You Keep Your Records?

A UST owner or operator must keep all required records at the UST site itself or at a readily available alternative site and must provide records for inspection upon request.

Keep all of your records in one central location, preferably in one filing cabinet so you can find them easily. A notebook binder for each facility provides an excellent way of organizing your records.

**TIP:**
**For ease of access and to help facilitate UST inspections, keep all your records for an UST facility in a single binder.**

| Table 11 - UST Compliance Records | |
|---|---|
| **RECORD(S)** | **DESCRIPTION** |
| Copy of the Current UST Operating Permit | *Permits are renewed and UST fees paid annually through the UST Central Office.* |
| Site Diagram | *A site diagram must be maintained on site. The site diagram should include the following information:*<br>❑ Location of each UST, dispenser, and associated piping with respect to property boundaries, roads and other permanent structures<br>❑ Year each UST was installed<br>❑ Storage capacity of each UST<br>❑ Exact type of product stored in each UST (regular, premium, kerosene, etc.) |
| UST-6 "Application to Install or Replace USTs" | *A copy of the original UST-6 post installation form along with the design plans should be retained for your records.*<br>❑ All parts of the form must be completed<br>❑ Form must be signed |
| UST-8 “Notification for Activities Involving Underground Storage Tank Systems (USTs)" | *Any time an activity (e.g., putting tanks into temporary closure, changing release detection methods etc.) occurs, an UST-8 form should be completed and sent in. Please retain a copy for your records.*<br>❑ Form must be signed<br>❑ Your current form of Financial Responsibility must be listed and kept up to date |
| UST-15 "Change of Ownership of UST System(s)" | *If a change in ownership has occurred an UST-15 should be submitted and a copy retained for your records.*<br>❑ Must be completed by both the previous owner (seller) and the new owner (buyer)<br>❑ Both parts must be signed and notarized<br>❑ Documentation showing proof of the transfer of ownership, including the date of transfer, should be attached |
| UST-15A "Ownership of UST System(s)" | *If new USTs have been installed an UST-15A should be submitted and a copy retained for your records.*<br>❑ Form must be signed and notarized |
| UST-3 "Notice of Intent: UST Permanent Closure or Change-in-Service"<br>UST-2A "Site Investigation Report for Permanent Closure or Change-in-Service of UST – REGISTERED TANKS" | *If any USTs at the location have been closed or have had a change-in-service then these two forms must be submitted to the appropriate regional office, as well as the UST Central Office. A copy must be retained for your records.* |

| Table 11 - UST Compliance Records | |
|---|---|
| **RECORD(S)** | **DESCRIPTION** |
| Upgrade, Maintenance and Repair Information | *Any maintenance, upgrade and repair work must be documented. The documentation must answer the following questions:*<br>❑ Who did the work? When was the work done? What work was done (be as specific as possible)? What industry standards were used in the work? (Copies of detailed invoices or work plans may help immensely in satisfying this requirement.)<br>❑ If ANY of the work dealt with a corrosion protection system, what were the qualifications and/or certifications of the person doing the work?<br>❑ For UST systems that were upgraded with corrosion protection, what integrity assessment method was used to determine that the system was capable of being upgraded? What were the results of the assessment? Who did the work? When was the work done?<br>❑ For repaired UST systems (e.g., ones that leaked), documentation that repairs were done in accordance with the manufacturer's instructions and/or national standards, copies of tightness tests, integrity assessment reports, etc. must be maintained for the life of the system. |
| UST-7A " North Carolina Cathodic Protection System Evaluation for Galvanic (Sacrificial Anode) Systems"<br>UST-7B " North Carolina Cathodic Protection System Evaluation for Impressed Current Systems"<br><br>UST-21 "Impressed Current Cathodic Protection System 60-Day Record of Rectifier Operation" or equivalent alternative log. | *All UST systems that use corrosion protection systems, such as sacrificial anodes or impressed current, must:*<br>❑ Be tested within six months of installation<br>❑ Be tested at least every three years thereafter<br>❑ Be tested by a qualified cathodic protection tester<br>❑ A completed and signed UST-7A form <u>must</u> be submitted to the UST Central Office within 30-days following any testing of a galvanic (sacrificial anode) system<br>❑ A completed and signed UST-7B form <u>must</u> be submitted to the UST Central Office within 30-days following any testing of a impressed current system<br>❑ Copies of the last two tests <u>must</u> be retained for your records<br><br>*In addition, UST systems using impressed current cathodic protection systems require:*<br>❑ Systems must be inspected every 60 days to ensure that the equipment is running properly<br>❑ A log sheet showing the date, current operational status (i.e. readings for voltage and current) and the name of the person who checked the system for the last three inspections should be retained for your records (see page 41 for an example log) |

| Table 11 - UST Compliance Records | |
|---|---|
| **RECORD(S)** | **DESCRIPTION** |
| Release Detection Records: Tanks | ❑ Last 12-months of release detection records. (e.g., ATG receipts, SIR results, Sensor Status Reports, etc.). If your release detection method is electronic, you also need to keep its alarm history report. |
| Release Detection Records: Piping (Pressurized Systems) | *Pressurized Piping Systems Require ALL of the following:*<br>❑ Performance claims (Third-Party Certifications) of the Automatic Line Leak Detectors (ALLD)<br>❑ Results of the last annual test of the ALLD. (If an electronic line leak detector is being used it must also be tested annually)<br>❑ Results of the last annual Line Tightness Test (LTT)<br>❑ In lieu of an annual LTT, the last 12 months of release detection records of an approved method of monthly monitoring for piping may be used (e.g. SIR, interstitial monitoring, electronic line leak detector, groundwater or vapor monitoring). If your release detection method is electronic you also need to keep its alarm history report. |
| Release Detection Records: Piping (Suction Systems)<br><br>Release Detection Records: Piping (Suction Systems) (cont.) | *Suction Piping Systems require only one of the following:*<br>❑ Results of the last Line Tightness Test (LTT) which are required once every three years<br>❑ Last 12 months of release detection records of an approved method of monthly monitoring for piping (e.g. SIR, Interstitial Monitoring, etc.). If your release detection method is electronic you also need to keep its alarm history report.<br>❑ Proof (e.g., UST-19 “Certification of Leak Detection Exemption for Suction Piping Associated with Underground Storage Tanks”) that the suction piping system is exempt from the release detection requirements because:<br>  ❑ the piping system operates at less than atmospheric pressure<br>  ❑ the piping slopes to allow product to drain back to the tank when suction is broken<br>  ❑ there is one check valve, and only one check valve, which is located directly under the pump in the piping system |

| Table 11 - UST Compliance Records | |
|---|---|
| **RECORD(S)** | **DESCRIPTION** |
| Release Detection Records: Equipment installed November 1, 2007 or after | ❑ Last 12 months of printed sensor status reports for all interstitial sensors<br>❑ Last 12 months of printed alarm history reports for all interstitial sensors<br>❑ Result of Annual Overfill Operability Check (UST-22A)<br>❑ Results of Leak Detection Equipment Operability Check (UST-22B). An alarm history report which was conducted after the check must be attached to the UST-22B form.<br>❑ Results of Annual Containment Sump Visual Inspections (UST-22C)<br>❑ Results of Triennial UST Spill Bucket Integrity Testing (UST-23A)<br>❑ Results of Triennial UST Containment Sump/UDC Integrity Testing (UST-23B)<br>❑ Results of Triennial UST Piping Integrity Testing (UST-23C)<br>❑ Results of Triennial UST Interstice Integrity Testing (UST-23D), if not monitored by vacuum, pressure or hydrostatic methods<br>❑ Results of the last annual test of the ALLD for pressurized piping systems. (If an electronic line leak detector is being used it must also be tested annually) |
| UST-17A "UST Suspected Release 24-Hour Notice"<br>UST-17B "UST Suspected Release 7-Day Notice"<br>UST-61 "24-Hour Release and UST Leak Reporting Form" | *If the UST system has ever been suspected of having had a release or if a release has been confirmed, it is important to have the following documentation:*<br>❑ When did the suspected release occur<br>❑ A copy of the UST-17A "UST Suspected Release 24-Hour Notice" and UST-17B "UST Suspected Release 7-Day Notice" that you submit to NCDEQ<br>❑ If the suspected release was confirmed, a copy of the UST-61 "24-Hour Release and UST Leak Reporting Form" that you submit to NCDEQ<br>❑ If the suspected release was determined to be a false alarm (due to malfunctioning release detection equipment etc.), documentation of the repairs from the UST equipment contractor<br>❑ Any tank tightness tests or line tightness tests used to confirm or deny suspected releases<br>❑ Any analytical results from soil or groundwater sampling |
| UST-20 "Alternative Fuel/Hazardous Substance Compatibility Checklist" | *If the UST system stores alternative fuels (ethanol blends containing greater than 10% ethanol or biodiesel blends containing greater than 20% biodiesel) or Hazardous Substances, it is important to have the following documentation:*<br>❑ A copy of the UST-20 "Alternative Fuel/Hazardous Substance Compatibility Checklist" |

| Table 11 - UST Compliance Records | |
|---|---|
| **RECORD(S)** | **DESCRIPTION** |
| Performance Claims (Third Party Certifications) | ❑ Third Party Certifications for all release detection equipment and programs (e.g., SIR programs, Tank Tightness Testing methods, Line Tightness Testing methods, Automatic Tank Gauges, probes, sensors, etc.)<br>❑ You are responsible for operating and maintaining your equipment and programs in accordance with the manufacturer's operating instructions and procedures<br>❑ Be sure that you have the exact "third party certification for each specific equipment, programs and methods<br>❑ If you do not have all the necessary third party certifications, contact the manufacturer or your supplier. |

| Table 12 - North Carolina UST Forms | | |
|---|---|---|
| **ACTION TAKEN** | **NOTIFICATION REQUIRED** | **SUBMITTAL DEADLINE** |
| Installation of a UST System | UST-6 "Application to Install or Replace USTs"<br>UST-6C "Application to Install or Replace USTs (Schedule of Materials)" | At least 30 days prior to anticipated installation. Will receive approval to install from NC DEQ after review. |
| | UST-15A "Ownership of UST System(s)" | Required within 30 days after installation |
| Temporary Closure of USTs | UST-8 "Notification for Activities Involving Underground Storage Tank Systems (USTs)" | Required within 30 days of temporary closure |
| Permanent Closure or Change-in-Service of USTs | UST-3 "Notice of Intent: UST Permanent Closure or Change-in-Service" | Required 30 days prior to permanent closure or change-in-service if the work is NOT under the direct supervision of a Professional Engineer (P.E.) or a Licensed Geologist (L.G.). Required 5 days prior to permanent closure or change-in-service if the work is under the direct supervision of a Professional Engineer (P.E.) or a Licensed Geologist (L.G.) |
| | UST-2A "Site Investigation Report for Permanent Closure or Change-in-Service of UST – REGISTERED TANKS" | Required within 30 days after permanent closure or change-in-service |
| | UST-2B "Site Investigation Report for Permanent Closure or Change-in-Service of UST – UNREGISTERED TANKS" | Required within 30 days after permanent closure or change-in-service |
| When requesting Tax Certification | UST-18 "Application for Tax Certification" | Required when submitting Tax Certification requests |
| Change in Ownership | UST-15 "Change of Ownership of UST System(s)" | Required within 30 days of change in ownership |
| | UST-8 "Notification for Activities Involving Underground Storage Tank Systems (USTs)" | Required within 30 days of change in ownership |

| Table 12 - North Carolina UST Forms | | |
|---|---|---|
| **ACTION TAKEN** | **NOTIFICATION REQUIRED** | **SUBMITTAL DEADLINE** |
| Corrosion Protection System Testing | UST-7A “Cathodic Protection System Evaluation for Galvanic (Sacrificial Anode) Systems”<br>UST-7B "Cathodic Protection System Evaluation for Impressed Current Systems" | Required within 30 days of the completion of any corrosion protection system test. Also required before operating permit renewal. |
| | UST-21 “Impressed Current Cathodic Protection System 60-Day Record of Rectifier Operation” | Have this form or an alternative log available at your next inspection. |
| Reporting of a Suspected Release<br>(based on release detection failure, unusual operating condition or a failed internal inspection) | UST-17A “UST Suspected Release 24-Hour Notice” | Required within 24 hours of suspecting that a release has occurred based on release detection failure, unusual operating condition or a failed internal inspection<br>**Must be followed up with a UST-17B form** |
| Reporting Investigation Results of a Suspected Release<br>(based on release detection failure, unusual operating condition or a failed internal inspection) | UST-17B “UST Suspected Release 7-Day Notice” | Required within 7 days of suspecting that a release has occurred based on release detection failure, unusual operating condition or a failed internal inspection |
| Reporting of a Known or Suspected Release<br>(based on evidence, such as odor, free product, stained soil and analytical data) | UST-61 "24-Hour Release and UST Leak Reporting Form" | Required within 24 hours of confirmation of a known or suspected release based on evidence (including odor, vapor, free product, stained soil and analytical data indicating contamination of soil or groundwater) that a release has occurred |
| Documenting the results of the monthly release detection method: Manual Tank Gauging | UST-16 “Manual Tank Gauging Record” | If you are conducting Manual Tank Gauging as your method of tank release detection, the last 12 months of UST-16 records must be kept on site |
| Documenting European Suction Piping Exemption | UST-19 “Certification of Leak Detection Exemption for Suction Piping Associated with Underground Storage Tanks” | Required for documenting any piping that meets the European suction qualifications. |
| Documenting the Compatibility of an UST System with Alternative Fuels or Hazardous Substances | UST-20 “Alternative Fuel/Hazardous Substance Compatibility Checklist” | Required documentation must be submitted prior to placing alternative fuels (ethanol blends containing greater than 10% ethanol or biodiesel blends containing greater than 20% biodiesel) or Hazardous Substances into an UST system. |

| Table 12 - North Carolina UST Forms | | |
|---|---|---|
| **ACTION TAKEN** | **NOTIFICATION REQUIRED** | **SUBMITTAL DEADLINE** |
| Documenting the triennial overfill operability check. | UST-22A "Overfill Prevention Equipment Operability Check" | Have for review at your next inspection. |
| Documenting the annual leak detection equipment operability check. | UST-22B "Annual Leak Detection Equipment Operability Check" | Have for review at your next inspection. |
| Documenting the annual sump visual inspection. | UST-22C "Annual Sump Visual Inspections" | Have for review at your next inspection. |
| Documenting the triennial spill bucket tightness test. | UST-23A "Triennial UST Spill Bucket Integrity Testing" | Have for review at your next inspection. |
| Documenting the triennial sump/UDC tightness test. (Equipment installed after 11/1/2007) | UST-23B "Triennial UST Containment Sump/UDC Integrity Testing" | Have for review at your next inspection if required at your site. |
| Documenting the triennial piping primary and interstice tightness test. (Equipment installed after 11/1/2007) | UST-23C "Triennial UST Piping Integrity Testing" | Have for review at your next inspection if required at your site. |
| Documenting the triennial tank interstice tightness test. (Equipment installed after 11/1/2007) | UST-23D "Triennial UST Interstice Integrity Testing" | Have for review at your next inspection if required at your site. |
| Documenting no visible corrosion on metallic piping components in contact with soil without corrosion protection. | UST-24 "Certification of No Visible Corrosion on Metallic Piping Components" | Have for review at your next inspection. |
| Documenting the Monthly Walkthrough inspections | UST-27 "Monthly Walkthrough Inspections" | Have for review at your next inspection. |

**All of these UST forms are available to you, free of charge, through the UST Central Office (919-707-8171) or via our web site: www.wastenotnc.org**

# Chapter 9: Resources and References

## A. Contact Information

1. **North Carolina Department of Environmental Quality (NCDEQ)**
   **Division of Waste Management – Underground Storage Tank Section**
   For Technical Information, State Regulations and Requirements and General Program Information contact the UST Central Office:
   NCDEQ-UST Section
   1646 Mail Service Center
   Raleigh, NC 27699-1646
   919-707-8171 (phone)
   919-715-1117 (fax)
   http://www.wastenotnc.org

2. **NCDEQ – UST Section Regional UST Offices**
   For General Program Information, Corrective Actions or to report a spill:

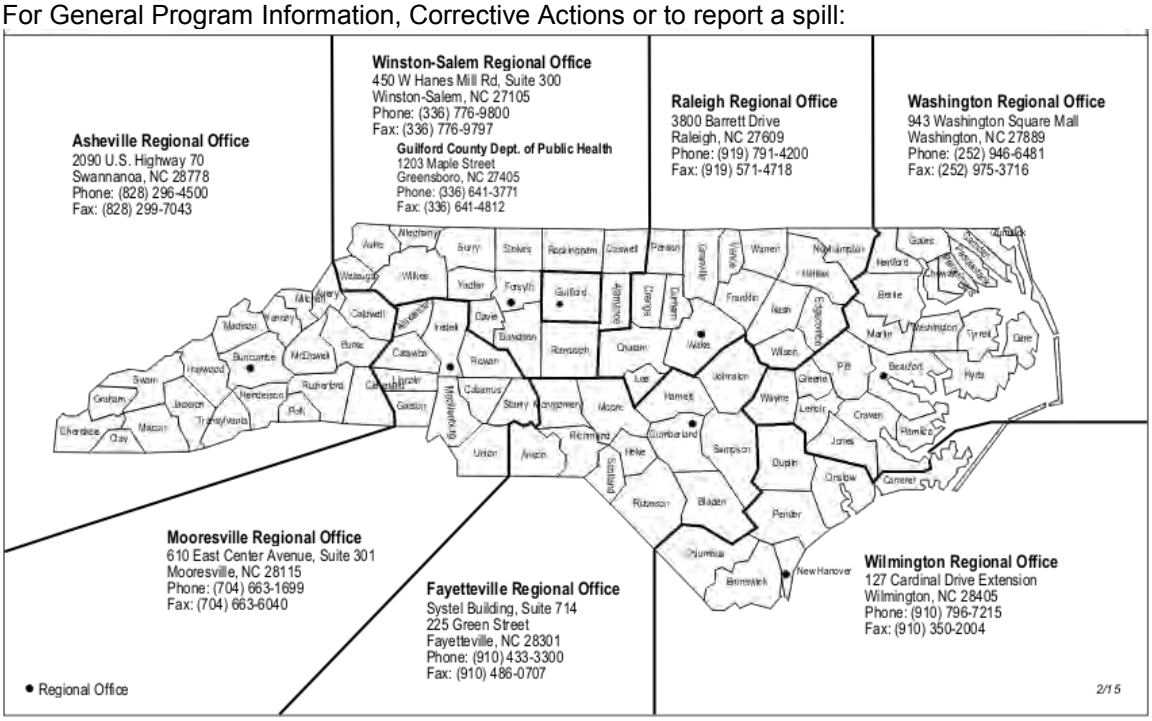


3. **U.S. Environmental Protection Agency**
   For information on the Federal UST program:
   U.S. EPA/OSWER/OUST
   1200 Pennsylvania Avenue, N.W.
   Mailcode: 5401G
   Washington, DC 20460

## B. Recommended Reading

1. **Publications from the North Carolina Department of Environmental Quality - Underground Storage Tank Section**
   The following publications are available from NCDEQ. You can obtain these documents a number of ways:
   - Phone: Call 919-707-8171
   - Internet: http://www.wastenotnc.org

   a. **North Carolina UST Regulations**
      - Title 15A North Carolina Administrative Code (NCAC) Subchapter 2N: "Criteria and Standards Applicable to Underground Storage Tanks"

   b. **Release Detection**
      - **Leak Detection Methods for Petroleum Underground Storage Tanks and Piping**
        Explains regulatory requirements for leak detection and briefly describes allowable leak detection methods.
      - **Manual Tank Gauging for Small Underground Storage Tanks**
        Booklet provides simple, step-by-step directions for conducting manual tank gauging for tanks 1,000 gallons or smaller. Contains record keeping forms.

   c. **Other Publications**
      - **Procedures for Sampling Water Supply Wells at Petroleum UST Facilities**
      - **Guidelines for Site Checks, Tank Closure, and Initial Response and Abatement**
      - **Financial Responsibility Manual**

   d. **FAQs/Brochures**
      - Alternative Fuel Storage Guidelines for UST Systems
      - Biodiesel Storage in USTs
      - Farm Tanks
      - Financial Responsibility Requirements for USTs
      - Groundwater Monitoring
      - Home Heating Oil USTs
      - Interstitial Monitoring
      - Leaking Petroleum Cleanup Funds
      - New Leak Detection Requirements for Emergency Generator USTs
      - Non-Regulated USTs
      - Preparing for a UST Inspection
      - Secondary Containment Performance Standards for USTs installed after 11/1/2007
      - Secondary Containment O&M Requirements for UST Systems and Components Installed or Replaced after 11/1/2007
      - Selecting an Environmental Consultant
      - Site Check Guidelines for Regulated USTs
      - Siting and Secondary Containment Requirements for Underground Storage Tank Systems near Wells and Surface Waters
      - Procedures for Placing UST Systems in Temporary Closure & Returning them to Service
      - UST Operator Training Requirements
      - UST System Installation
      - UST Responsibilities for Owners and Operators
      - Vapor Monitoring

2. **Publications from the Environmental Protection Agency**
   The publications are free and available from the U.S. Environmental Protection Agency (EPA). You can obtain these documents by going to the following website: https://www.epa.gov/ust/publications-related-underground-storage-tanks

## C. Internet Resources

(Links to external servers do not imply any official NCDEQ endorsement of the opinions or ideas expressed therein, or guarantee the validity of the information provided.)

1. **Government Links**
   - US EPA Office of Underground Storage Tanks: http://www.epa.gov/ust
   - NC Department of Environmental Quality, Underground Storage Tank Section: http://www.wastenotnc.org

2. **Association Links**
   - American Petroleum Institute (API): http://www.api.org
   - American Society of Testing and Materials (ASTM): http://www.astm.org
   - Association of State and Territorial Solid Waste Management Officials (ASTSWMO – Tanks Subcommittee): http://astswmo.org/tanks
   - New England Interstate Water Pollution Control Commission (NEIWPC): http://www.neiwpcc.org/
   - National Association of Corrosion Engineers (NACE): http://www.nace.org
   - National Fire Protection Association (NFPA): http://www.nfpa.org
   - National Leak Prevention Association (NLPA): http://www.nlpa-online.org
   - National Work Group On Leak Detection Evaluations: http://www.nwglde.org
   - Petroleum Equipment Institute (PEI): http://www.pei.org
   - Steel Tank Institute (STI): http://www.steeltank.com
   - Underwriter's Laboratory (UL): http://www.ul.com

# Chapter 10: Glossary

**Note: Words and phrases in italics are defined elsewhere in this glossary.**

## A

**ACT-100 / ACT-100U** refers to a national standard detailing fabrication standards for steel tanks clad in a fiberglass reinforced plastic or polyurethane coating. See *composite tank*.

**ALLD** - See *automatic line leak detector*

**American Petroleum Institute (API)** is one of several organizations that has developed codes of practice concerning the installation, maintenance, use, and performance standards of *underground storage tank systems*. [www.api.org].

**American Society of Testing and Materials Standards (ASTM)** is one of several organizations that has developed codes of practice concerning the installation, maintenance, use, and performance standards of *underground storage tank systems*. [www.astm.org].

**Ancillary equipment** means any devices including, but not limited to, such devices as piping, fittings, flanges, valves, and pumps used to distribute, meter or control the flow of regulated substances to and from an UST.

**Anode** is the positive electrode (or terminal) in an electrolytic system or circuit. See *sacrificial anode.*

**API** – See *American Petroleum Institute*.

**API 1631** refers to the *American Petroleum Institute*'s Recommended Practice 1631 "Interior Lining and Periodic Inspection of Underground Storage Tanks" which provides minimum recommendations for the interior lining of existing steel and fiberglass reinforced plastic underground tanks used to store petroleum-based motor fuels and middle distillates.

**ASTM** – See *American Society of Testing and Materials Standards*

**ATG** – See *Automatic Tank Gauge*

**Automatic line leak detector (ALLD)** is an electronic or mechanical device that continuously monitors pressurized piping systems for catastrophic *releases*. In the event that the ALLD detects a drop in pressure in the product delivery line that equates to a 3-gallon per hour (gph) or greater leak, the ALLD will either: restrict flow, shut flow off completely or sound an alarm. All pressurized piping systems are required to have ALLDs.

**Automatic Shutoff Device** refers to either of the following:

1) an *overfill prevention device* that automatically and completely stops the flow of product into an UST during a fuel delivery when the tank is no more than 95% full. See *Flapper valve*
2) an *automatic line leak detector* that completely shuts off the flow of product within the piping in the event of a catastrophic release

**Automatic tank gauge (ATG)** is a device, or collection of devices, used to detect *releases* or measure inventory in *USTs*. ATGs typically consist of two separate components; a probe installed into a port on top of the tank that automatically measures the level of product and a console box that tracks and displays the amount of product in the tank. A loss of product and/or gain of water within the UST will cause the console to alert the UST operator that the tank may be leaking. Many ATG consoles print out a record of daily inventories and leak tests. Standard ATGs require a certain amount of "down time" for the UST, when product is not being placed in it or dispensed from it, for the test to be run accurately. Continuous ATGs, on the other hand, take measurements throughout the day and do not have the same limitation when it comes to requiring "down time".

## B

**Ball float valve** (also called a float vent valve) is a *overfill prevention device* that is installed at the vent pipe in the *tank* and restricts vapor flow in an *UST* as the *tank* gets close to being full. The ball float valve should be set at a depth which will restrict vapor flow out of the vent line during delivery at 90% of the *UST*'s capacity or 30 minutes prior to overfilling. (NOTE: Ball float valves are not an approved overfill prevention device for use on *UST*s with either suction *piping* systems, or *co-axial vapor recovery* systems.)

## C

**Cathode** *is* the negative electrode (or terminal) in an electrolytic system or circuit. See *sacrificial anode.*

**Cathodic protection or cathodically protected** means a method of reducing or preventing *corrosion* of a metal surface by making that surface the cathode of an electrochemical cell.

**Cathodic protection tester** means a person who can demonstrate an understanding of the principles and measurements of all common types of cathodic protection systems as applied to metallic underground *tank*s and piping systems.

**CFR** – See *Code of Federal Regulations*

**Change in service** means a change in the substances stored in the *UST* system from a *regulated substance* to a non-regulated substance, without permanent closure of the *UST* system.

**Clad tank** – See *Composite Tank*

**Coaxial vapor recovery** is one of two forms of *Stage I vapor recovery*. In a coaxial vapor recovery system the fill pipe is set inside a slightly larger pipe, and while fuel is placed into the tank through the fill pipe, displaced vapors move back to the fuel truck through the space between the two pipes.

**Code of Federal Regulations (CFR)** are the general and permanent rules published in the Federal Register by the executive departments and agencies of the Federal Government. It is divided into 50 titles that represent broad areas subject to Federal regulation. The *UST* rules are in Title 40: **"**Protection of Environment**"**.

**Compartmentalized or compartment tank** means a tank that has been sectioned into multiple compartments so that it can hold different products (e.g., regular unleaded, premium unleaded)

**Composite tank** means a tank that is constructed of steel with a layer of non-corrodible material, generally fiberglass reinforced plastic or polyurethane, bonded to its exterior.

**Contingency plan** means planned procedures for reporting, containing, removing, and cleaning up a *spill* or *leak*.

**Corrosion** means the deterioration of a metal resulting from a reaction with its environment.

**Corrosion expert** is a person recognized by NACE International (formerly the National Association of Corrosion Engineers) as a *corrosion* specialist, *cathodic protection* specialist, or a registered professional engineer experienced in *corrosion protection*.

**Corrosion protection** means a method of reducing or preventing corrosion of an *underground storage tank system* through *cathodic protection*, the application of protective coatings, or the use of a non-corroding material in its construction.

**CP** – See *Cathodic protection*

## D

**Day** means any continuous 24 hour period.

**De minimis concentration** means that amount of a *regulated substance* which does not exceed one percent of the capacity of the *tank*, excluding the *piping* and vent lines.

**DEQ**- See *North Carolina Department of Environmental Quality*

**Discharge** means releasing, *spilling, leaking*, pumping, pouring, emitting, emptying, or dumping of *petroleum* products into the environment, whether intentional or unintentional.

**Dispenser** means the stand-alone unit used to accurately dispense product (e.g., gasoline), complete credit card transactions, etc. Sometimes dispensers are referred to as a "gas pumps", although technically only suction piping systems have the pump located within the dispenser.

**Dispenser sump** is a container located underneath or near a dispenser or self-contained suction pump that collects or contains *leaks*. Sumps are not meant to contain regulated substances for extended periods of time and all product should be expeditiously removed.

**Drop tube** refers to the pipe that is installed into the fill port of the tank. Drop tubes channel the product to within a foot of the bottom of the tank in an attempt to minimize the disturbance of product already in the tank. *Flapper valves*, if present, are installed in drop tubes.

**Dual-Point Vapor Recovery** is one of two forms of *Stage I vapor recovery*. In a dual-point vapor recovery system, fuel is placed into the tank through the fill pipe and displaced vapors move back to the fuel truck by a separate connection to the tank.

## E

**ELLD** – See *Electronic Line Leak Detector*

**Electronic line leak detection (ELLD)** is an electronic device that continuously monitors pressurized piping systems for releases. ELLDs usually monitor the pressure change in a pipe when the pump turns on or off. The pressure will change differently in a tight line than a leaking line. Electronic systems may be wired to the pump controls to shut off flow and/or wired to an alarm to alert the operator in the event of a leak. Most ELLDs are able to perform the job of an ALLD, that is detect 3.0 gph leaks, as well as be able to perform 0.2 gph and 0.1 gph leak rate tests.

**Enhanced leak detection** is a combination of leak detection monitoring and well sampling that offers *UST system* owners an extended deadline to comply with "secondary containment" requirements for *UST systems* located in close proximity to water supply wells used for *human consumption* and certain surface waters.

**European suction** refers to a style of suction piping for *UST systems* that is defined as having:

- enough slope so that the product in the pipe can drain back into the tank when suction is released and
- has only one check valve, which is as close as possible beneath the pump in the *dispenser*

## F

**Fiberglass reinforced plastic (FRP)** is a composite made from fiberglass reinforcement in a plastic (polymer) matrix. Both tanks and piping can be constructed out of FRP.

**Fill pipe** means the pipe where product is introduced into the *UST*.

**Financial responsibility** means that *UST* owners and operators must ensure, either through insurance or other approved method, that they have the financial resources to help pay for the costs of third-party liability and corrective actions caused by leaks or spills from an *UST system*.

**Flapper valve** is an *automatic shutoff device* installed in the *drop tube* of the *tank* and shuts off the flow of product into a *tank* as the *tank* gets close to being full. The flapper valve should be set at a depth which will shut off the flow of product into the *tank* during delivery at 95% of the *tank'*s capacity. Flapper valves are one form of *overfill prevention*.

**Flex connector** – See *flexible connector piping section*

**Flex piping** – See *flexible piping*

**Flexible connector piping section** is constructed of a synthetic tube (e.g., Teflon-coated fabric) that carries the product, and is surrounded by a woven stainless steel jacket. Flexible connector piping sections are often used to replace "swing joints" as a method of reducing pipe stress and provide flexibility near the transition points for underground piping connections at the *dispenser* and *tank*.

**Flexible piping** refers to *piping* that, unlike rigid piping (e.g., steel and *fiberglass reinforced plastic*), is flexible. Flexible piping is typically constructed of multiple layers of thermoplastic materials.

**FRP** - See *fiberglass reinforced plastic*.

# G

**Groundwater monitoring** means a method of *release detection* where groundwater samples are collected from monitoring wells every 14 days and then checked for the presence of petroleum.

# H

**Human consumption** includes, but is not limited to: drinking, bathing, showering, cooking, dishwashing, laundering and oral hygiene. Water for toilets or sinks is also considered human consumption.

# I

**Impressed current** is a method of *corrosion protection* that employs a continuous external power supply to provide protective current to inhibit corrosion activity. Permanently installed anodes are connected to an AC/DC rectifier that forces the steel object to be protected to a cathodic or protective condition.

**Integrity assessment** refers to approved methods of assessing the integrity of *tanks.* Integrity assessments were required on all *tanks* installed before December 22, 1988 prior to upgrading them with corrosion protection to meet the 1998 federal upgrade requirements.

**Interior lining** – see *internal coating.*

**Internal coating** means a coating or lining of a non-corrodible material bonded firmly to the interior surface of a storage *tank* that does not chemically or physically degrade when in contact with the product stored therein. Many USTs have a coating applied to the interior of the tank to reduce corrosion and/or prevent the product from being in contact with the tank.

**Internally-lined tank** means a tank installed before December 22, 1988 that has been lined with an internal coating in accordance with *API 1631* or *NLPA 631.*

**Interstitial monitoring** is a method of *release detection* where an *interstitial space* is used to determine if an *UST* or piping system is leaking. For tanks, there are four typical ways that this is accomplished. The interstitial space, if empty, is monitored for the presence of product. The interstitial space, if filled with a monitoring fluid, is monitored for a gain or loss. The interstitial space, if under a pressure or vacuum, is monitored for a change in pressure. For double-walled piping, the interstitial space is typically monitored by sloping the piping so that any leak from the inner (primary) pipe will be contained by the outer (secondary) pipe and run back to a *sump* where it can be contained long enough to be detected.

**Interstitial space** is the space between the inner (primary) and outer (secondary) wall of a double-walled *UST* or double-walled piping system.

# J

**Jacketed tank** means a double-walled UST with the inner wall being made out of steel and the outer wall being made out of a non-corrodable material such as fiberglass reinforced plastic or polyurethane. Unlike *composite tanks*, jacketed tanks have a gap, or *interstitial space*, between the inner and outer wall.

## L

**Leak** means any loss of *regulated substance* from an *underground storage tank system*.

**Leak detection** – See *release detection*

**Lines** – See *piping*.

**Line-leak detector (LLD)** is a device used in *pressurized piping* systems to detect a *leak*. Line leak detectors are either mechanical or electronic in construction. See *automatic line leak detector.*

**LTT** – See *line tightness test.*

**Line tightness test (LTT)** is a test of the *piping* to determine whether or not it is leaking. LTT must be capable of detecting a 0.1 gallon per hour leak rate at one and one-half times the operating pressure of the piping system.

## M

**Manifolded tank systems** are *tank*s connected by piping that allow the *tank system* to function as a single *tank*. A typical manifolded *tank system* usually consists of two *tank*s connected by a siphon tube that permits the product in the *tank*s to be at the same level while product is being pumped out of only one *tank*.

**Manual tank gauging (MTG)** is a method of *release detection* that can only be used on *UST*s 1,000 gallons or smaller. Only tanks 550 gallons or smaller can use this method alone. *Tank*s from 551 to 1,000 gallons can use MTG only if there diameter is 48" or 64".

**Mechanical Line Leak Detector (MLLD)** refers to the mechanical version of an *Automatic Line Leak Detector* (ALLD).

**MLLD** – See *Mechanical Line Leak Detector*

**Monthly monitoring method** refers to *release detection* methods for *USTs,* performed on a monthly basis: See *release detection*.

**MTG** See *Manual Tank Gauging*

## N

**NACE** (formerly known as National Association of Corrosion Engineers) is the recognized organization for setting the standards for establishing and maintaining corrosion protection of buried metallic structures. NACE also certifies qualified individuals as *corrosion experts* and as *cathodic protection testers***.**

**National Leak Prevention Association (NLPA)** is one of several organizations that has developed codes of practice concerning the inspection, repair and lining of *underground storage tank systems*. [www.nlpa-online.org].

**NCDEQ –** See *North Carolina Department of Environmental Quality*

**NCDEQ-UST** – See *Underground storage tank section*

**NLPA** – See *National Leak Prevention Association*

**NLPA 631** refers to the *National Leak Prevention Association*'s Standard 631 which provides minimum recommendations for the interior lining, repair and internal inspection of steel and fiberglass reinforced plastic USTs.

**Non-regulated UST**, when dealing with *NCDEQ-UST,* means an UST system that is exempt from Title 15A North Carolina Administrative Code Subchapter 2N (15A NCAC 2N) "Criteria and Standards Applicable to Underground Storage Tanks". Note: Just because a UST system may not be regulated by 15A NCAC 2N does not mean it isn't regulated by some other statutes, laws, etc. (e.g., Leaking Petroleum Underground Storage Tank Cleanup Funds Act, Clean Water Act, Resource Conservation and Recovery Act)

**North Carolina Department of Environmental Quality (NCDEQ)** is the governmental agency in North Carolina responsible for the preservation and protection of the environment. The *Underground Storage Tank Section* is a part of *NCDEQ*.

# O

**Overfill alarm** refers to an electrical device used to audibly and/or visually alert a fuel deliverer that the tank is nearing maximum capacity when it is being filled. See *overfill prevention.*

**Overfill prevention** refers to a mechanical device ("ball float" valves; "flapper" valves), electrical device (*overfill alarm*), or fill procedure system that is intended to prevent a *storage tank* from being overfilled.

**Oil-water separator** is a device for collecting and separating non-soluble, non-emulsified petroleum from water.

**Operator** means any person in control of, or having responsibility for, the daily operation of the UST system.

**Operating permit** – See *UST Permit*

**Out-of-service** means that an *underground storage tank system* or portion thereof is not being operated.

**Overfill prevention device** is a mechanical device, electrical device, or fill procedure system that is intended to prevent a *storage tank* from being overfilled. See *ball float valve; flapper valve;* and *overfill alarm.*

**Owner** is (a) in the case of an *UST System* in use on November 8, 1984, or brought into use after that date, any person who owns an *UST system* used for storage, use, or dispensing of *regulated substances*; and (b) in the case of an *UST system* in use before November 8, 1984, but no longer in use on or after that date, any person who owned such *UST* immediately before the discontinuation of its use.

# P

**PEI** - See *Petroleum Equipment Institute*

**Performance claim** (a.k.a. "third party" certification) is the written documentation detailing the conditions or limitations under which a specific *release detection* method or piece of release detection equipment can detect a release of *regulated substance* with a probability of detection of 0.95 and a probability of false alarm of 0.05.

**Permit** – See *UST Permit*

**Petroleum Equipment Institute (PEI)** *is one of several organizations that has developed codes of practice concerning the installation, maintenance, use, and performance standards of underground storage tank systems.* [www.pei.org]

**Piping** means a hollow cylinder or tubular conduit that is constructed of non-earthen materials. Piping includes all valves, elbows, joints, flanges, and flexible connectors attached to a tank system through which *regulated substances* flow

**Precision leak detection test** is a test capable of detecting a *storage tank leak* as small as 0.1 gal/hr with a probability of detection of 0.95 or greater and a probability of false alarm of 0.05 or less, within a period of 24 hours, accounting for variables such as vapor pockets, thermal expansion of product, temperature stratification, groundwater level, evaporation, pressure and end deflection.

## R

**Regulated substance** is (a) any substance defined in section 101(14) of the Comprehensive Environmental Response and Liability Act (CERCLA) of 1980 (but not including any substance regulated as a hazardous waste under subtitle C), and (b) petroleum, including crude oil or any fraction thereof that is liquid at standard conditions of temperature and pressure (60 degrees Fahrenheit and 14.7 pounds per square inch absolute). The term "regulated substance" includes, but is not limited to *petroleum* and petroleum-based substances comprised of a complex blend of hydrocarbons derived from crude oil through processes of separation, conversion, upgrading, and finishing, such as motor fuels, jet fuels, distillate fuel oils, residual fuel oils, lubricants, petroleum solvents, and used oils.

**Regulated UST**, when dealing with NCDEQ-UST, means an UST system that is subject to the requirements of Title 15A North Carolina Administrative Code Subchapter 2N (15A NCAC 2N) "Criteria and Standards Applicable to Underground Storage Tanks".

**Release** means any spilling, leaking, emitting, discharging, escaping, leaching or disposing from an UST into groundwater, surface water or subsurface soils.

**Release detection** is a device or method that is capable of detecting *leaks* in an *underground storage tank system*. Often times the term release detection is used interchangeably with *leak detection*.

**Release investigation** refers to the required investigation and confirmation of all *suspected releases* within seven days or another reasonable time period specified by *NCDEQ-UST*, using either a *system test*, *site check* or another procedure approved by *NCDEQ-UST*:

## S

**Sacrificial anode** is an anode attached to a metal object, such as an underground *tank*, to inhibit the object's corrosion. The anode electrolytically decomposes while the metal object remains free of damage.

**Safe suction** – see *European suction*

**Secondary containment** is a method of release detection for *UST* systems that consists of double-walled *UST system*(s) with *interstitial monitoring.*

**Semi-volatile organic compounds** (SVOCs) may be roughly defined as organic compounds with a boiling point above about 220$^{o}$C. The term "organic" indicates that these compounds contain carbon. Laboratory analysis of samples that detect SVOCs is indicative of the presence of the heavier, less refined petroleum substances such as heating oil, kerosene and diesel fuels.

**SIR** – see statistical inventory reconciliation

**Site check** refers to measuring for the presence of a *release* where contamination is most likely to be present at the *UST* site. In selecting sample types, sample locations, and measurement methods, *owners* and o*perators* must consider the nature of the stored substance, the type of initial alarm or cause of suspicion, the type of backfill, the depth of ground water, and other factors for identifying the presence or source of the *release.* If the test results for the excavation zone or the *UST* site indicate that a *release* has occurred, *owners* and *operators* must begin corrective action. If the test results for the excavation zone or *UST* site do not indicate that a release has occurred, further investigation is not required. Procedures for a site check are contained in the most recent version of the UST Section's "Guidelines for Site Checks, Tank Closure, and Initial Response and Abatement".

**Sludge** means the *petroleum* product residue or material that accumulates at the bottom of a *storage tank*.

**Spill** means any loss of a regulated substance onto the ground from an aboveground portion of the *UST system* or from product delivery.

**Spill bucket** – See spill containment device

**Spill containment device** means a container fitted to the *fill pipe* of a *storage tank* or to the suction coupling of a *used oil storage tank* that helps prevent spills from entering the environment.

**Stage I vapor recovery** is used during the refueling of gasoline storage tanks to reduce hydrocarbon emissions. Gasoline vapors in the tank, which are displaced by the incoming gasoline, are routed through a hose into the fuel truck, instead of being vented to the atmosphere. There are two types of Stage I systems, dual point and coaxial.

**Stage II vapor recovery** is used during the refueling of vehicles to reduce hydrocarbon emissions. Gasoline vapors in the vehicle's fuel tank, which are displaced by the incoming gasoline, are routed through a specially-designed connector on the nozzle and back into the UST, instead of being vented to the atmosphere.

**Statistical Inventory Reconciliation (SIR)** means a method of *release detection* where a trained professional uses sophisticated computer software to conduct a statistical analysis of inventory, delivery, and dispensing data to determine whether or not the tank and/or piping is leaking.

**STI** – See *Steel Tank Institute.*

**Steel/FRP Tank –** See *composite tank*

**Steel Tank Institute (STI)** *is one of several organizations that has developed codes of practice concerning the installation, maintenance, use, and performance standards of underground storage tank systems. [*www.steel*tank*.com/]

**Sti-P3** means a *UST* design developed by the *Steel Tank Institute* that employs factory-installed sacrificial anodes, a durable dielectric coating and bushings that isolate the *UST* from any other metal component, such as *piping* or *ancillary equipment*.

**Storage tank** means a closed container for the storage of *petroleum* with a capacity of more than 110 gallons that is designed to be installed in a fixed location.

**STP** – See *submersible turbine pump*.

**Submersible turbine pump (STP)** is a fuel pump located in an *UST* that forces the fuel, under pressure through the piping system to the dispenser.

**Sump** means a below grade area that allows access to equipment such as pumps, valves, piping. If containment sumps are installed they can also serve to catch and temporarily hold drips and spills of *regulated substances*. Containment sumps are not meant to routinely contain *regulated substances*. Sumps are most often found beneath *dispensers*; around *submersible turbine pumps*; at fill ports; and at piping transitions.

**Suspected release** means any of the following:

- The discovery by *owners*, *operators* or others of evidence of *released regulated substances* at the *UST* site or in the surrounding area (such as the presence of free product or vapors in soils, basements, sewer and utility lines, and nearby surface water, or
- Unusual operating conditions observed by *owners* and *operators* unless system equipment is found to be defective but not leaking, and is immediately repaired or replaced, ("unusual operating conditions" include, but are not limited to, the erratic behavior of dispensing equipment; the unexplained presence of water in the *tank*; the presence of fuel in containment sumps or interstitial spaces; or the degradation of any equipment or element of an *underground storage tank system* to the point where that equipment or element cannot reasonably be expected to perform its intended function.), or
- Monitoring results from an approved release detection method indicates that a *release* may have occurred unless:
    - The monitoring device is found to be defective, and is immediately repaired, recalibrated, or replaced, and additional monitoring does not confirm the initial result; or
    - In the case of inventory control, a second month of data does not confirm the initial result.

**SVOCs** – see *semi-volatile organic compounds.*

**System test** refers to *tank tightness tests* and/or *line tightness tests* conducted to determine whether a leak exists in that portion of the *tank* that routinely contains product, or the attached delivery *piping*, or both.

- *Owners* and *operators* must repair or replace the *UST* system, and begin corrective action if the test results for the system, *tank* or delivery *piping* indicate that a *leak* exists.
- Further investigation is not required if the test results for the system, *tank* or delivery piping do not indicate that a leak exists and if environmental contamination is not the basis for suspecting the release.

# T

**Tank** means a stationary device designed to contain an accumulation of *regulated substances* and constructed of non-earthen materials (e.g., concrete, steel, plastic) that provides structural support.

**Tank bottom water** means water that accumulates at the bottom of a *storage tank*.

**Tank tightness test (TTT)** is a test of the *tank* to determine whether or not it is leaking. TTT must be capable of detecting a 0.1 gallon per hour leak rate from any portion of the *tank* that routinely contains product while accounting for the effects of thermal expansion or contraction of product, vapor pockets, *tank* deformation, evaporation or condensation, and the location of the water table. TTTs are often two separate tests: one test that evaluates the wetted portion of the *UST* and another test that evaluates the dry, or *ullage*, portion of the *UST*.

**Temporarily closed** means:

- An *UST system* from which product has been removed such that not more than one inch of product and residue are present in any portion of the *tank*; or
- Any *UST system* in use as of December 22, 1998 which complies with the provisions of 15A NCAC 2N .0801

**Third party certification** – See *Performance Claim.*

**Tightness testing** refers to the act of performing a *tank tightness test* or *line tightness test* depending on what specific component is being referred to.

**TTT** see *tank tightness test*.

# U

**Ullage** means the un-wetted portion of the *tank*, i.e. that portion of the *tank* that does not contain *petroleum* product.

**UL** see *Underwriters Laboratories*.

**Underwriters Laboratories (UL)** *is one of several organizations that has developed codes of practice concerning the installation, maintenance, use, and performance standards of underground storage tank systems. [*www.ul.com]

**Underground storage tank (UST)** means any one or combination of *tank*s (including underground piping connected thereto) that is used to contain an accumulation of *regulated substances*, and the volume of which (including the volume of underground pipes connected thereto) is 10 percent or more beneath the surface of the ground. This term does not include any:

- Farm or residential *tank* of 1,100 gallons or less capacity used for storing motor fuel for noncommercial purposes; or
- *Tank* used for storing heating oil for consumptive use on the premises where stored; or
- Septic *tank*; or
- Pipeline facility (including gathering lines) regulated under:

- The Natural Gas Pipeline Safety Act of 1968 (49 U.S.C. App. 1671 et seq.), or
- The Hazardous Liquid Pipeline Safety Act of 1979 (49 U.S.C. App. 2001 et seq.), or
- Which is an intrastate pipeline facility regulated under state laws comparable to the provisions of the Natural Gas Pipeline Safety Act of 1968 (49 U.S.C. App. 1671 et seq.) or the Hazardous Liquid Pipeline Safety Act of 1979 (49 U.S.C. App. 2001 et seq.).; or
- Surface impoundment, pit, pond, or lagoon; or
- Storm-water or wastewater collection system; or
- Flow-through process *tank*; or
- Liquid trap or associated gathering lines directly related to oil or gas production and gathering operations; or
- Storage *tank* situated in an underground area (such as a basement, cellar, mineworking, drift, shaft or tunnel) if the storage *tank* is situated upon or above the surface of the floor.

**Underground Storage Tank Section** is the governmental agency in North Carolina that issues permits, collects annual fees and handles requests for information for regulated and /or commercial underground storage tanks. The Section ensures compliance with all relevant state and federal laws, policies, rules and regulations by assisting owners and operators in complying with operational standards (release detection, spill and overfill prevention, etc.). This Section oversees the administration of several Trust Funds for the reimbursement of cleanup costs associated with UST releases. This section also oversees the permanent closure of UST systems, as well as, assessment and cleanup of any releases.

**Underground storage tank system** means an *underground storage tank*, including all underground *piping* and ancillary equipment and containment systems, if any.

**UST** – See *Underground storage tank*

**UST permit** refers to the annual operating permit required in order to place product into an *UST*. *Owners* and *operators* are required to obtain an UST permit annually for each facility at which an *UST* is located. The specific requirements for applying for a permit are <u>all</u> of the following:

- Annual *tank* fees
- Proof of *tank* ownership
- *Tank* registration
- *Tank* compliance
- Proof of *financial responsibility*

**UST system –** See *Underground storage tank system.*

# V

**Vapor monitoring** means a method of *release detection* where vapor samples are collected from monitoring wells every 14 days and then checked for the presence of petroleum vapor.

**Vent** means an opening in an *underground storage tank system* that is specifically designed to relieve excess internal pressure or vacuum within an *underground storage tank system.*

**Volatile organic compounds (VOCs)** are chemicals that evaporate easily at room temperature. The term "organic" indicates that the compounds contain carbon. VOCs may be roughly defined as organic compounds with a boiling point below about 220ºC. Laboratory analysis of samples that detect VOCs is indicative of the presence of the lighter, more refined petroleum substances such as gasoline and solvents.

**VOCs** – see *volatile organic compounds.*